Pr_70_60_36_73
Pr_35_90_43_70

contour

LST & Anti-Ligature Radiators & Guards

contour

Providing safe solutions for a variety of environments

Contents

4 Introduction
6 Biocote
8 Colour Psychology
10 DeepClean Range
38 DeepClean Extra Anti-Ligature Range
58 Bespoke Options
60 Covora Range
66 Covora Lite
72 Sovereign
92 HVAC - Air Con Unit Covers
94 Pipe Boxing
96 Anti-Ligature Products
102 Further Reading
103 Alternative Delta T Requirements

Introduction

Contour has been at the forefront of Low Surface Temperature (LST) & anti-ligature radiator and radiator guard design, manufacture and installation since 2003. During this time, we have developed an extensive range of solutions to satisfy the changing needs of the market and our customers.

Our market leading DeepClean range of radiators and guards has, since its launch in 2006, revolutionised the protection of vulnerable people from dangerously hot surface heating, in the healthcare, education and care home environments. In addition, the DeepClean system with its integral antimicrobial technology has potentially helped hospitals and care facilities throughout the UK save millions of pounds in cleaning costs, with its quick and easy access for cleaning and maintenance. A full pipe casing, HVAC & perimeter casing and manifold cabinet offer is also available to complete our safe surface temperature package.

Contour's work within the mental health sector has led us to develop a range of anti-ligature solutions, specifically designed for use in mental health and challenging environments. Alongside our anti-ligature radiators and guards, our latest innovations include anti-ligature ventilation grilles, light switch covers and much more.

Support

Site surveys, technical drawings and installation are some of the services Contour offer to make sure the clients needs are met.*

Contour offers free technical site surveys and can provide an installation service on all covers*

BIM

Contour's radiators and guards are available as parametric BIM objects ready to be dropped into plans and our Technical and Customer Services teams are available by phone or email to answer any queries and ensure that projects, whether for first fit or refurbishment, are hassle free.

*Terms and conditions apply

About Contour

We are specialists in the design, manufacture and installation of innovative high-quality safe surface temperature heating solutions and anti-ligature solutions. We have a 'can do' spirit and excel in meeting technically challenging specifications where quality is paramount.

We are the innovation leaders in the UK LST & anti-ligature radiators and guards market

- The patented quick access design of our DeepClean radiator guards has potentially saved the NHS and other public bodies millions, every year in cleaning costs
- Contour was the first UK radiator guard manufacturer to incorporate antimicrobial technology into its guards, setting new standards in hygiene and user protection
- Our specialist anti-ligature radiator guards, equipped with fully shrouded TRVs, security grilles and tamper-proof fixings to prevent unauthorised access, are widely recognised as setting the standard across the NHS, mental health and custodial sectors.

We provide free of charge surveys

Contour provides a UK wide free survey service to make sure the product is suitable for the environment it's being installed into. Radiator covers, pipe boxing and TV cabinets can be installed by our team of qualified installers.

We can offer bespoke guard designs

In addition to our standard ranges, Contour is well experienced in developing and installing radiator guards to meet specific requirements.

We design and manufacture in the UK

All our guards are designed and manufactured at our Midlands plant. This not only ensures a premium quality product but allows us to produce and deliver orders on short lead times throughout the UK.

Warranties for total peace of mind

Contour radiator emitters and guards are respectively covered by 10 and 5 year product warranties *.

*Terms and conditions apply

Contour's Antimicrobial Products

Contour Heating are the only company to incorporate BioCote® antimicrobial protection into our LST and anti-ligature radiators and guards. This unique additive provides an effective and long-lasting solution to combatting a wide range of bacteria, including MRSA and *E.coli.*

The antimicrobial efficacy of BioCote® products has been tested against a wide range of Gram positive and Gram negative bacteria as well as fungi. BioCote® has been proven to inhibit the growth of these organisms, thus improving the hygiene of protected surfaces.

The DeepClean range incorporates BioCote® antimicrobial protection, as standard into the paintwork of all the LST and anti-ligature radiator guards. BioCote® technology provides effective and permanent protection to the surface of the radiator guard, preventing the growth of microbes such as bacteria and fungi.

BioCote is:

Effective - The silver ions in BioCote® damage the cell wall, disrupting energy production and other cellular functions and prevent microbes from reproducing.

Proven - BioCote is a proven broad spectrum antimicrobial technology, effective against a wide range of bacteria, fungi and the H1N1 virus.

Fast acting and long lasting - BioCote® treated surfaces show significant microbial reductions within just 15 minutes of exposure to living bacteria and up to 99.5% reduction in under 2 hours (see graph on opposite page). This performance will last for the expected lifetime of the product.

Efficacy - The active agents in BioCote® have been used extensively in hospitals as excellent antimicrobials with low toxicity against non-target organisms. They do not function in the same way as antibiotics and there is no evidence to date to demonstrate that bacteria have become resistant to BioCote® as they have to some antibiotics.

BioCote

BioCote Ltd.
3 Parade Court, Central Boulevard,
Prologis Park, Coventry, CV6 4QL
Telephone: +44 (0) 2477 712 488
E-mail: biocote@biocote.com
www.biocote.com

CERTIFICATE OF ANTIBACTERIAL ANALYSIS

CERTIFICATE NO.	BC139/2020	DATE RECEIVED	27.10.2020
CUSTOMER	CONTOUR HEATING PRODUCTS LTD	DATE ANALYSED	27.10.2020
CUSTOMER REF.	200/1012	DATE REPORTED	30.10.2020
MANUFACTURER	PARAMOUNT		
UNITS OF RESULTS	Colony Forming Units	NO. OF PAGES	1 of 1

METHOD OF ANALYSIS: DETERMINATION OF ANTIBACTERIAL ACTIVITY USING ISO 22196: 2011

SAMPLE	TEST ORGANISM	CONTACT TIME		REDUCTION (INITIAL)	
		0 HRS	24 HRS	Log_{10}	%
BIOCOTE® PROTECTED PAINT	MRSA	5.16E+04	<100	>2.74	>99.82%
BIOCOTE® PROTECTED PAINT	E. coli	5.83E+04	<100	>2.77	>99.83%

The above data describe the difference in the population sizes of the test organisms, relative to the initial (0 hours) population, following contact with the surface of the samples detailed in this CoA for 24 hours at 35°C under a RH of >90%. These conditions are those specified by the ISO 22196: 2011 method of analysis.

Comment: The sample BIOCOTE® PROTECTED PAINT has achieved the BioCote minimum antibacterial performance requirement of 95% "Reduction against the initial for E. coli and MRSA" according to ISO 22196: 2011 analysis.

FOR BIOCOTE LTD

Technical Manager
Megan Vaughan

Registered office: BioCote Ltd., 3 Parade Court, Central Boulevard, Prologis Park, Coventry, CV6 4QL
Registered in England No. 3460690 | VAT No. GB705049170 | ISO 9001:2015 and ISO 14001:2015 certified
Procedure 001 Appendix B | Issue 8 – 11.01.2018 | M. Vaughan

BioCote® has been tested and seen to be effective against the following bacteria:

- *Staphylococcus aureus (including MRSA)*
- *Escherichia coli (E.coli)*
- *Listeria monocytogenes*
- *Streptococcus faecalis*
- *Salmonella enteritides*

Life time protection

Products treated with BioCote® have been tested for the simulated life of the product / material with no significant reduction in the antimicrobial performance noted, therefore demonstrating antimicrobial efficacy for the life of the radiator guard.

Why Choose BioCote®?

BioCote® is the market leading antimicrobial additive supplier with over 20 years' world wide experience. BioCote® specialise in the development and application of antimicrobial technology; nothing else. This has helped them become the supplier of choice to companies around the world and only products that demonstrate over a 95% reduction in bacteria are allowed to use the BioCote® brand as a guarantee of superior antimicrobial performance. For additional peace of mind any additive supplied by BioCote® goes through a regular and rigorous externally audited quality control process.

A regular schedule of independent laboratory-based QC testing is conducted to ensure the continual efficacy of Contour's LST guards treated with BioCote®. Full test certification can be accessed through the archive on our website: www.contourheating.com/resource-library/biocote.

Following Contour's lead other manufactures have introduced radiator guards also treated with antimicrobial agents. However few, if any can, provide certification to prove the independently verified efficacy of their antimicrobial products.

Colour Psychology

When planning the construction or refurbishment of a space within a mental health, education environment - or anywhere that occupies challenging or vulnerable individuals - it is essential that measures are put in place within the design process to reduce anxiety and discomfort for patients or students.

Colours can be used strategically within children's hospitals, autism wards, SEN schools and mental health environments to support the interior design of the space.

Colour psychology has a huge impact on design choices in the marketplace. Whether it's to brand your product most effectively or create an environment that will inspire service users, colour psychology is relevant to every aspect of design.

Research into the influence of colours shows that the human brain can be drawn towards - or away from - a company, product or service, purely because of the brand colour palette.

According to Psychology Today, 90% of judgements made about products are based on colour alone.

Colour tends to be too dependent on personal experience to be universally translated into a wider meaning. This means that we can't make generalised, concrete statements like, 'red reminds people of passion' because the colour red will remind each individual of something different depending on their continuously evolving experiences.

However, research has noted broader patterns in the moods that colours evoke. These are based on stereotypes and societal conventions that, though evolving, arouse similar associations for large groups of people (i.e. blue = Conservative, red = Labour).

Here at Contour we are able to offer a wide range of Polyester Powder Coating colours to suit your projects needs.

DeepClean Range

Radiator guards have traditionally been basic, fixed units that make access difficult and time-consuming. Internal cleaning usually requires complete disassembly if the cover is made from multiple panels, or two people to remove the cover if it's too big for one person and, in the case of hospitals or healthcare facilities, this usually requires extensive assistance from Facilities or Estates personnel.

Ultimately, this impacts on cleaning schedules and hygiene standards. A radiator guard interior that has not been cleaned combined with the convection process, work together to form the perfect conditions for the growth and distribution of potentially dangerous bacteria and particles.

Contour's DeepClean design makes it possible for a single cleaning operative to access internal and external surface of the radiator guard without any support from a Facilities or Estates department. This allows for full access for cleaning inside the radiator guard. This significantly improves cleaning efficiencies, helps reduce overheads and importantly raises hygiene standards.

DeepClean LST Radiator

Whether it's the full drop down door or the 'pencil proof grilles', the DeepClean LST Radiator boasts numerous benefits to the user. Combined with its BioCote® anti-microbial technology and optional rotatory valve kits, these make for the perfect solution in hygiene control.

Powder coated inside & outside with Biocote® protection on models finished in RAL 9003 White. Other colours are available.

Made from 1.5mm Zintec steel - gives strength and robustness. 2mm thick casings available for mental health and other secure facility applications. Casing also available in Magnelis for wet and humid areas

Pencil Proof grilles, punched directly from the guard for ease of cleaning.

Casings up to 2m in length are mostly supplied in one piece - no site assembly required (some casings under 2m may require a split dependant on height and depth)

Radius corners make it safer if someone falls against the unit

External TRVs available

Patented easy to open front panel that can lie flat to floor when fully open. The design also facilitates complete removal of the door if required

DeepClean models

DeepClean LST and anti-ligature radiators and guards are available in four models:

1.
Floor mounted / flat top

2.
Wall mounted / flat top

3.
Floor mounted / sloping top

4.
Wall mounted / sloping top

DeepClean colour options

DeepClean radiator guards are available in a wide range of colours, including:

White	Oyster White	Tele Grey
RAL9003	RAL1013	RAL7047

Mint Green	Ultramarine	Jet Black
RAL6029	RAL5002	RAL9005

1

2

3

4

The benefits of DeepClean

Major cost savings through ease and speed of cleaning

Typically one traditional style radiator guard can take well over an hour to disassemble, remove, clean, reassemble and refit, including the removal and subsequent reapplication of silicon sealant between the wall and guard.

The DeepClean design makes it possible for a single cleaning operative to access every internal and external surface of the radiator guard without any support from a Facilities or Estates department.

This significantly improves cleaning efficiencies, helps reduce overheads and importantly raises hygiene standards. The DeepClean radiator guard itself has a unique, patented door design (UK Patent No. 2 410 544) with quick release locks, which allows the complete front of the radiator guard to lower and lie flat on the floor. The open hinge arrangement also permits front door removal if required.

In addition Rotarad™ rotating radiator valves can also be retrofitted to existing panel radiators to allow the emitter to fully pivot down to the floor – delivering access behind the radiator for unrivalled cleaning and maintenance.

The business case for specifying DeepClean

Contour has enabled the NHS to potentially save over £35 million since 2006*

We've achieved this by developing the revolutionary DeepClean LST and anti-ligature guard range. On this basis here's an example costing based on a hospital with 150 radiators that require a full weekly clean.

Traditional LST	DeepClean LST
2 person job involving estates personnel.	1 cleaning operative alone can now open the LST casing.
Conservatively estimate at least 30 minutes to remove 1 LST casing, clean casing internally, clean radiator, clean wall, clean floor and refit casing (wall & back of radiator cannot be cleaned). Excludes replacing silicon sealant around unit.	5 minutes to clean every internal surface of the casings and the radiator, including back of radiator and whole wall space. No need to replace sealant around units.
7 hours working day = 14 LST radiator guards cleaned per day per team.	In an average day of 7 working hours, 1 person can clean 84 radiators.
Over 10 days required for 2 people to clean the 150 radiators in the property.	Allow 2 days for 1 person to clean every radiator in the property.
Weekly cleaning of these radiators would require 2 teams of two staff, both working at least 5 days a week to complete 1 cleaning cycle.	Weekly cleaning would now realistically require only 1 dedicated cleaner, with little or no support from the estates department.
An annual budget of at least £63,481.60 at the National Living Wage (£8.72 ph as of 19/5/21) would be required to clean all 150 radiators on a weekly basis.	At the National Living Wage (£8.72 ph as of 19/5/21) weekly cleaning of these radiators would cost the hospital £6,348.16 per year.

In this example, replacing traditional LST units with DeepClean LST radiators or guards could save £57,133.44 in cleaning costs by the end of year 1, or over £380.89 per radiator/guard.

*Savings figure is based on the likely costs for cleaning traditional LST radiators to the required NHS standards, compared to the estimated cost of cleaning all the Contour DeepClean LST radiators supplied to NHS facilities since 2006, to the same standard. Standards based on NHS guidelines that state radiators should be cleaned on a weekly basis and that radiator guards should be removed as part of a 'damp-dusting' cleaning regime. For reference these specifications can be found in NHS National Patient Safety Agency documents 'The national specifications for cleanliness in the NHS: Guidance on setting and measuring performance outcomes in primary care medical and dental premises', August 2010 and 'The Revised Healthcare Cleaning Manual', June 2009.

TRV Kits

Contour offers four different thermostatic radiator valve (TRV) kits specifically designed for our LST radiators. They are available for both two pipe and one pipe systems.

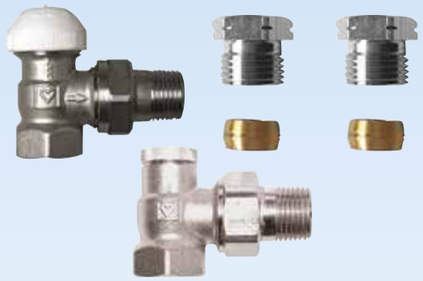

Each kit includes these standard components which are suitable for 1/2" steel or 15mm copper 2 pipe systems. If alternative patterns and fitting on to a one pipe system then please contact our technical department to arrange an alternative solution within our range

Internal
Code: 9210-13

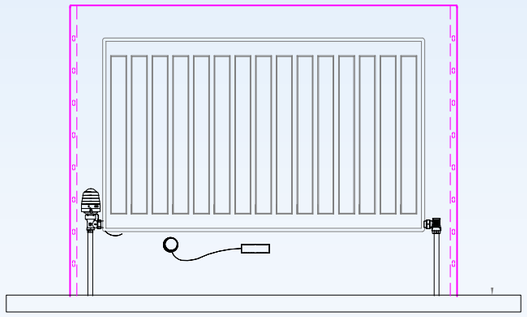

Remote Sensing
Code: 7463-41

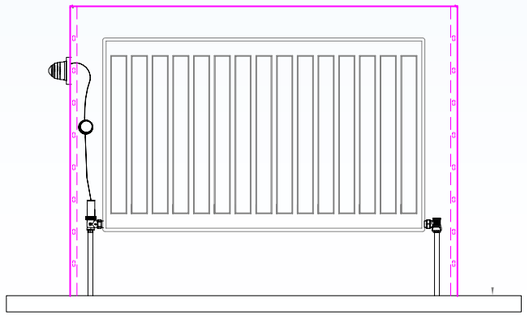

External
Code: 9330-41

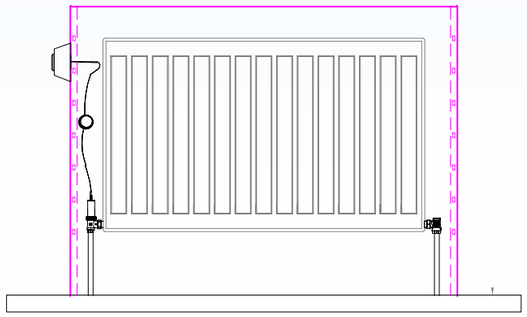

Anti Ligature
Code: 1935241

Valve Options:

90210-13 Standard Internal TRV Kits

Suitable for areas where access to the valve is not of a high priority and can be adjusted a few times a year depending on weather conditions.

Bottom Bottom Opposite End (BBOE) connections required to avoid the thermostatic head from getting false temperature readings.

7463-41 Internal TRV Kit With Remote Sensor

Suitable for radiators that are connected Top Bottom opposite End (TBOE), meaning the thermostat will be located at the top of casings.

The remote sensor can be installed to the bottom inlet grill or on the wall next to the casing.

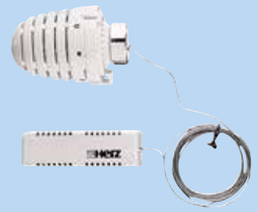

9330-41 Standard External TRV Kit

External TRV head means adjustment is available to all. Should you wish to limit the adjustment locking pins are supplied as standard.

1935241 Anti-Ligature TRV Kit C/W back to wall shroud

Suited for mental health environments, the CNC back to wall shrouds reduces the risk of ligature points and vandalism, without compromising on patient ability to adjust.

Rotarad™ rotating radiator valves*

Rotarad is a unique, WRAS, KTW and ACS approved rotating valve kit, which can be used on both new installation projects and retrofitted to existing radiators.

Valve Adapter Kit**

Contour's valve adapter allows for a new Contour TRV kit to be installed on to existing radiator valves where it's not compatible with the Herz thread. This allows for replacement covers and valves to be installed on to existing heating system without the need for draining down.

- *RotaRad kit is only suitable on steel panel radiators that are connected to a two pipe system with BBOE connections. We recommend installing a RotRad kit on to a maximum size of 1500 x 600 double panel radiator.
- **Contour valve adapter may not be suitable for domestic valve bodies. If the valves on the heating system is older than 10 years and experiencing sticking issues then we recommend for the heating system to be drained and new valve bodies to be installed.

DeepClean - Standard Grilles Floor Mounted - Flat Top

Summary:

Manufacture:

- 1.5mm Zintec steel
- 10mm Radius edges / bullnose corners
- Patented full height front access door with hinge (Pat. No. 2 410 544)
- 5.5mm Punched grille
- Cut-outs programmed into manufacture

Emitter:

- Compact steel panel radiators. EN 442 tested and certified
- Operating pressure 10 bar -(tested to 13 bar/188PSI)

Sizes

- Single casing length 600mm to 2000mm
- Single casing height 550mm to 1150mm (Type 33 from 450mm)
- Lengths over 2000mm can be achieved but will be modular design so some assembly required on site
- Bespoke solutions available

Valve options available:

- Internal TRV kit 9210-13
- External TRV kit 9330-41
- Remote sensing TRV kit 7463-41
- Anti-Ligature TRV kit 19352-41
- Rotarad rotating valve kit:
  RR04 Single Fin / RR05 Half Fin / RR06 Double Fin (not suitable for Triple Fin radiators)
- Alternative valve patterns and sizes are available upon request

Finish:

- Polyester powder coated RAL 9003 as standard. Other colour finishes available Patented BioCote® anti-microbial agent as standard

Fixings:

- All fixings internal
- 6mm Allen key door locks as standard
- Other secure options available

Technical Information & Specifications

Standard delivery

- Standard delivery comprises radiator guard of choice, corresponding Compact emitter (Single Fin, Half Fin, Double Fin and Triple Fin as specified) and the option of a 90 degree Herz ½" valve kit (suitable for 15mm copper to copper connection on a two-pipe system)
- An optional Rotarad rotary valve is available (not suitable for Triple Fin radiators)
- Split delivery* to reduce the risk of radiator casings becoming damaged or lost on site, Contour offer split deliveries as standard on all LST radiators. Radiators and valves are delivered first then once the heating system is installed, tested and commissioned, casings are delivered. This virtually eliminates storage problems and the risk of on-site damage.

  *Additional carriage charges will apply for multiple phases

Optional Extras

- Magnelis for wet rooms
- Different guages of material available
- Strengthening struts
- Door cables

Heat outputs to BS EN 442 Certification.

Outputs based on a mean radiator water temperature of 70°C and a room temperature of 20°C - Delta T 50°C

To acheive Delta T60 increase T50 figure by 20.5%

To calculate alternative Delta T requirements please refer to page 103

To convert BTU to Watts multiply by 0.293. To convert Watts to BTU divide by 0.293

DeepClean - Standard Grilles - Floor Mounted - Flat Top

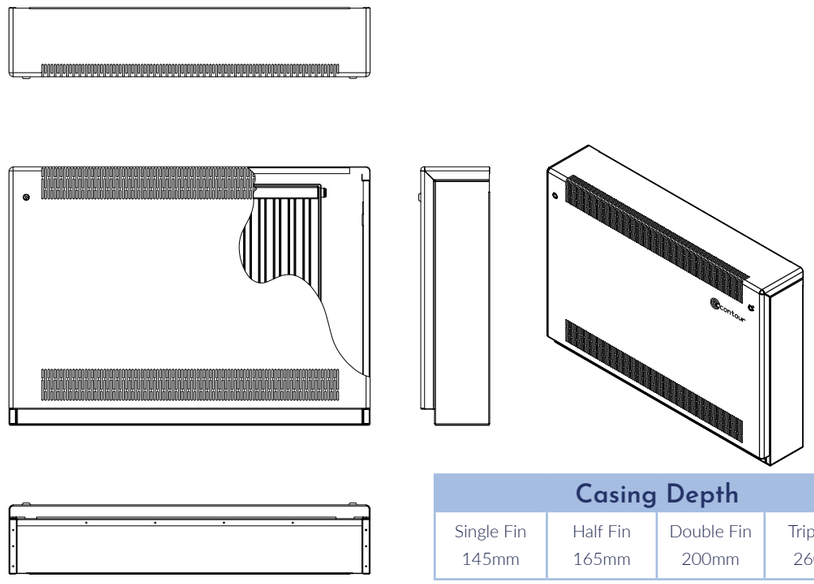

Casing Depth			
Single Fin 145mm	Half Fin 165mm	Double Fin 200mm	Triple Fin 260mm

Casing Depths: 145mm | 165mm | 200mm | 260mm

Deepclean - Flat Top - Floor Mounted - Standard Grilles

Casing Height	Casing Length	SF/Type 11 Output Watts	SF/Type 11 Product Code	HF/Type 12 Output Watts	HF/Type 12 Product Code	DF/Type 22 Output Watts	DF/Type 22 Product Code	TF/Type 33 Output Watts	TF/Type 33 Product Code
550	600	192	DFF5506SF	292	DFF5506HF	375	DFF5506DF	517	DFF5506TF
	700	241	DFF5507SF	365	DFF5507HF	468	DFF5507DF	647	DFF5507TF
	800	289	DFF5508SF	438	DFF5508HF	562	DFF5508DF	776	DFF5508TF
	900	337	DFF5509SF	511	DFF5509HF	655	DFF5509DF	905	DFF5509TF
	1000	385	DFF5510SF	584	DFF5510HF	749	DFF5510DF	1035	DFF5510TF
	1100	433	DFF5511SF	657	DFF5511HF	843	DFF5511DF	1164	DFF5511TF
	1200	481	DFF5512SF	730	DFF5512HF	936	DFF5512DF	1293	DFF5512TF
	1300	530	DFF5513SF	803	DFF5513HF	1030	DFF5513DF	1422	DFF5513TF
	1400	578	DFF5514SF	876	DFF5514HF	1124	DF55147DF	1552	DFF5514TF
	1500	626	DFF5515SF	949	DFF5515HF	1218	DFF5515DF	1681	DFF5515TF
	1600	674	DFF5516SF	1022	DFF5516HF	1311	DFF5516DF	1810	DFF5516TF
	1800	770	DFF5518SF	1168	DFF5518HF	1498	DFF5518DF	2069	DFF5518TF
	2000	867	DFF5520SF	1314	DFF5520HF	1685	DFF5520DF	2328	DFF5520TF
	2200	963	DFF5522SF	1460	DFF5522HF	1873	DFF5522DF	2586	DFF5522TF
	2400	1059	DFF5524SF			2060	DFF5560DF	2845	DFF5524TF
	2600	1156	DFF5526SF			2247	DFF5526DF	3104	DFF5526TF
	2900	1300	DFF5529SF			2528	DFF5529DF	3492	DFF5529TF
	3200	1444	DFF5532SF			2809	DFF5532DF		
650	600	248	DFF6506SF	372	DFF6506HF	480	DFF6506DF		
	700	310	DFF6507SF	465	DFF6507HF	599	DFF6507DF	829	DFF6507TF
	800	372	DFF6508SF	558	DFF6508HF	719	DFF6508DF	995	DFF6508TF
	900	434	DFF6509SF	651	DFF6509HF	839	DFF6509DF	1161	DFF6509TF
	1000	496	DFF6510SF	744	DFF6510HF	959	DFF6510DF	1326	DFF6510TF
	1100	558	DFF6511SF	837	DFF6511HF	1079	DFF6511DF	1492	DFF6511TF
	1200	620	DFF6512SF	930	DFF6512HF	1199	DFF6512DF	1658	DFF6512TF
	1300	682	DFF6513SF	1023	DFF6513HF	1319	DFF6513DF	1824	DFF6513TF
	1400	744	DFF6514SF	1116	DFF6514HF	1439	DFF6514DF	1990	DFF6514TF
	1500	806	DFF6515SF	1209	DFF6515HF	1558	DFF6515DF	2155	DFF6515TF
	1600	868	DFF6516SF	1302	DFF6516HF	1678	DFF6516DF	2321	DFF6516TF
	1700	930	DFF6517SF	1395	DFF6517HF	1798	DFF6517DF		
	1800	993	DFF6518SF	1488	DFF6518HF	1918	DFF6518DF	2653	DFF6518TF
	2000	1117	DFF6520SF	1674	DFF6520HF	2158	DFF6520DF	2985	DFF6520TF
	2200	1241	DFF6522SF	1860	DFF6522HF	2398	DFF6522DF	3316	DFF6522TF
	2400	1365	DFF6524SF	2046	DFF6524HF	2637	DFF6524DF	3648	DFF6524TF
	2600	1489	DFF6526SF	2232	DFF6526HF	2877	DFF6526DF		
	2900	1675	DFF6529SF			3237	DFF6529DF		
	3200	1861	DFF6532SF			3596	DFF6532DF		
750	500	224	DFF7505SF			432	DFF7505DF		
	600	298	DFF7506SF	447	DFF7506HF	576	DFF7506DF		
	700	373	DFF7507SF	559	DFF7507HF	720	DFF7507DF	996	DFF7507TF
	800	447	DFF7508SF	671	DFF7508HF	865	DFF7508DF	1196	DFF7508TF
	900	522	DFF7509SF	783	DFF7509HF	1009	DFF7509DF	1395	DFF7509TF
	1000	597	DFF7510SF	895	DFF7510HF	1153	DFF7510DF	1594	DFF7510TF
	1100	671	DFF7511SF	1007	DFF7511HF	1297	DFF7511DF	1793	DFF7511TF
	1200	746	DFF7512SF	1119	DFF7512HF	1441	DFF7512DF	1993	DFF7512TF
	1300	820	DFF7513SF	1231	DFF7513HF	1585	DFF7513DF	2192	DFF7513TF
	1400	895	DFF7514SF	1342	DFF7514HF	1729	DFF7514DF	2391	DFF7514TF
	1500	970	DFF7515SF	1454	DFF7515HF	1873	DFF7515DF	2591	DFF7515TF
	1600	1044	DFF7516SF	1566	DFF7516HF	2017	DFF7516DF	2790	DFF7518TF
	1700	1119	DFF7517SF	1678	DFF7517HF	2161	DFF7517DF		
	1800	1193	DFF7518SF	1790	DFF7518HF	2305	DFF7518DF	3188	DFF7518TF
	2000	1342	DFF7520SF	2014	DFF7520HF	2594	DFF7520DF	3587	DFF7518TF
	2200	1492	DFF7522SF	2237	DFF7522HF	2882	DFF7522DF	3985	DFF7522TF
	2400	1641	DFF7524SF	2461	DFF7524HF	3170	DFF7524DF	4384	DFF7524TF
	2600	1790	DFF7526SF	2685	DFF7526HF	3458	DFF7526DF		
	2900	2014	DFF7529SF			3890	DFF7529DF		
	3200	2237	DFF7532SF			4323	DFF7532DF		

DeepClean - Flat Top - Floor Mounted - Standard Grilles

Casing Depths: 145mm | 165mm | 200mm | 260mm

Deepclean - Flat Top - Floor Mounted - Standard Grilles

Casing Height	Casing Length	SF/Type 11 Output Watts	SF/Type 11 Product Code	HF/Type 12 Output Watts	HF/Type 12 Product Code	DF/Type 22 Output Watts	DF/Type 22 Product Code	TF/Type 33 Output Watts	TF/Type 33 Product Code
850	500	259	DFF8505SF	389	DFF8550HF	499	DFF8505DF	690	DFF8505TF
	600	345	DFF8506SF	447	DFF8560HF	665	DFF8506DF	920	DFF8506TF
	700	432	DFF8507SF	559	DFF8570HF	832	DFF8507DF	1150	DFF8507TF
	800	518	DFF8508SF	671	DFF8580HF	998	DFF8508DF	1380	DFF8508TF
	900	604	DFF8509SF	783	DFF8590HF	1164	DFF8509DF	1610	DFF8509TF
	1000	691	DFF8510SF	895	DFF8510HF	1331	DFF8510DF	1840	DFF8510TF
	1100	777	DFF8511SF	1007	DFF8511HF	1497	DFF8511DF	2070	DFF8511TF
	1200	863	DFF8512SF	1119	DFF8512HF	1663	DFF8512DF	2300	DFF8512TF
	1300	950	DFF8513SF	1231	DFF8513HF	1830	DFF8513DF	2530	DFF8513TF
	1400	1036	DFF8514SF	1342	DFF8514HF	1996	DFF8514DF	2760	DFF8514TF
	1500	1122	DFF8515SF	1444	DFF8515HF	2162	DFF8515DF		
	1600	1209	DFF8516SF	1566	DFF8516HF	2329	DFF8516DF	3220	DFF8516TF
	1700	1295	DFF8517SF	1678	DFF8517HF	2495	DFF8517DF		
	1800	1381	DFF8518SF	1790	DFF8518HF	2661	DFF8518DF	3680	DFF8518TF
	2000	1554	DFF8520SF	2014	DFF8520HF	2994	DFF8520DF	4140	DFF8520TF
	2200	1727	DFF8522SF	2237	DFF8522HF	3327	DFF8522DF	4600	DFF8522TF
	2400	1899	DFF8524SF	2461	DFF8524HF	3660	DFF8524DF	5059	DFF8524TS
	2600	2072	DFF8526SF	2685	DFF8526HF	3992	DFF8526DF		
	2900	2331	DFF8529SF			4491	DFF8529DF		
	3200	2590	DFF8532SF			4990	DFF8532DF		
950	600	389	DFF9506SF	586	DFF9506HF	748	DFF9506DF	1032	DFF9506TF
	700	486	DFF9507SF	733	DFF9507HF	935	DFF9507DF	1290	DFF9507TF
	800	584	DFF9508SF	879	DFF9508HF	1121	DFF9508DF	1548	DFF9508TF
	900	681	DFF9509SF	1026	DFF9509HF	1308	DFF9509DF	1806	DFF9509TF
	1000	778	DFF9510SF	1173	DFF9510HF	1495	DFF9510DF	2064	DFF9510TF
	1100	875	DFF9511SF	1319	DFF9511HF	1682	DFF9511DF	2322	DFF9511TF
	1200	973	DFF9512SF	1466	DFF9512HF	1869	DFF9512DF	2580	DFF9512TF
	1300	1070	DFF9513SF	1612	DFF9513HF	2056	DFF9513DF	2838	DFF9513TF
	1400	1167	DFF9514SF	1759	DFF9514HF	2243	DFF9514DF	3096	DFF9514TF
	1500	1265	DFF9515SF	1906	DFF9515HF	2430	DFF9515DF		
	1600	1362	DFF9516SF	2052	DFF9516HF	2617	DFF9516DF	3612	DFF9516TF
	1700	1460	DFF9517SF			2804	DFF9517DF		
	1800	1556	DFF9518SF	2345	DFF9518HF	2990	DFF9518DF	4128	DFF9518TF
	2000	1751	DFF9520SF	2639	DFF9520HF	3364	DFF9520DF		
	2200	1946	DFF9522SF			3738	DFF9522DF		
	2400	2140	DFF9524SF			4112	DFF9524DF		
	2600	2335	DFF9526SF			4486	DFF9526DF		
	2900	2626	DFF9529SF			5046	DFF9529DF		
	3200	2918	DFF9532SF			5607	DFF9532DF		
1150	600	467	DFF1106SF	712	DFF1106HF	892	DFF1106DF	1227	DFF1106TF
	700	583	DFF1107SF	890	DFF1107HF	1116	DFF1107DF	1534	DFF1107TF
	800	700	DFF1108SF	1067	DFF1108HF	1339	DFF1108DF	1841	DFF1108TF
	900	817	DFF1109SF	1245	DFF1109HF	1562	DFF1109DF	2148	DFF1109TF
	1000	933	DFF1110SF	1424	DFF1110HF	1785	DFF1110DF	2455	DFF1110TF
	1100	1050	DFF1111SF			2008	DFF1111DF	2762	DFF1111TF
	1200	1167	DFF1112SF			2231	DFF1112DF	3069	DFF1112TF
	1300	1283	DFF1113SF			2454	DFF1113DF	3376	DFF1113TF
	1400	1400	DFF1114SF			2677	DFF1114DF	3682	DFF1114TF
	1500	1517	DFF1115SF			2901	DFF1115DF	3989	DFF1115TF
	1600	1634	DFF1116SF			3124	DFF1116DF	4296	DFF1116TF
	1800					3570	DFF1118DF		
	2000					4016	DFF1120DF		

All outputs are shown at a ΔT of 50. To calculate other ΔT requirements, please refer to page 103

Extended Lead Times

Deepclean - Standard Grilles

Floor Mounted - Sloping Top

Summary:

Manufacture:

- 1.5mm Zintec steel
- 10mm Radius edges / bullnose corners
- Patented full height front access door with hinge (Pat. No. 2 410 544)
- 5.5mm Punched grille
- Cut-outs programmed into manufacture

Emitter:

- Compact steel panel radiators. EN 442 tested and certified
- Operating pressure 10 bar -(tested to 13 bar/188PSI)

Sizes

- Single casing length 600mm to 2000mm
- Single casing height 550mm to 1150mm (Type 33 from 450mm)
- Lengths over 2000mm can be achieved but will be modular design so some assembly required on site
- Bespoke solutions available

Valve options available:

- Internal TRV kit 9210-13
- External TRV kit 9231-41
- Remote sensing TRV kit 7463-41
- Anti-Ligature TRV kit 19352-41
- Rotarad rotating valve kit:
  RR04 Single Fin / RR05 Half Fin / RR06 Double Fin (not suitable for Triple Fin radiators)
- Alternative valve patterns and sizes are available upon request

Finish:

- Polyester powder coated RAL 9003 as standard. Other colour finishes available
- Patented BioCote® anti-microbial agent as standard

Fixings:

- All fixings internal
- 6mm Allen key door locks as standard
- Other secure options available

Technical Information & Specifications

Standard delivery

- Standard delivery comprises radiator guard of choice, corresponding Compact emitter (Single Fin, Half Fin, Double Fin and Triple Fin as specified)) and the option of a 90degree Herz ½" valve kit (suitable for 15mm copper to copper connection on a two-pipe system)
- An optional Rotarad rotary valve is available (not suitable for Triple Fin radiators)
- Split delivery* to reduce the risk of radiator casings becoming damaged or lost on site, Contour offer split deliveries as standard on all LST radiators. Radiators and valves are delivered first then once the heating system is installed, tested and commissioned, casings are delivered. This virtually eliminates storage problems and the risk of on-site damage.

  *Additional carriage charges will apply for multiple phases

Optional Extras

- Magnelis for wet rooms
- Different guages of material available
- Strengthening struts
- Door cables

Heat outputs to BS EN 442 Certification.

Outputs based on a mean radiator water temperature of 70°C and a room temperature of 20°C - Delta T 50°C

To acheive Delta T60 increase T50 figure by 20.5%

To calculate alternative Delta T requirements please refer to page 103

To convert BTU to Watts multiply by 0.293. To convert Watts to BTU divide by 0.293

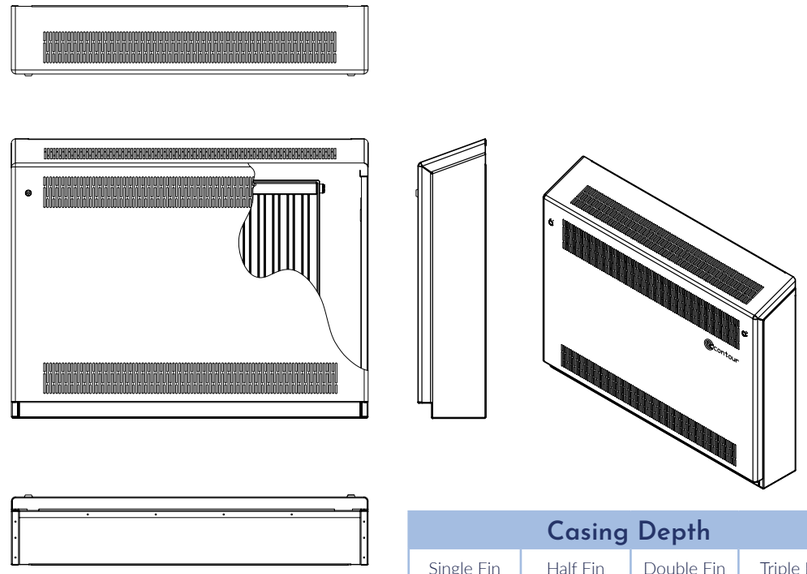

Casing Depth			
Single Fin	Half Fin	Double Fin	Triple Fin
145mm	165mm	200mm	260mm

Casing Depths: 145mm | 165mm | 200mm | 260mm

Deepclean - Sloping Top - Floor Mounted - Standard Grilles

Casing Height	Casing Length	SF/Type 11 Output Watts	SF/Type 11 Product Code	HF/Type 12 Output Watts	HF/Type 12 Product Code	DF/Type 22 Output Watts	DF/Type 22 Product Code	TF/Type 33 Output Watts	TF/Type 33 Product Code
600	600	192	DSF6006SF	292	DSF6006HF	375	DSF6006DF	517	DSF6006TF
	700	241	DSF6007SF	365	DSF6007HF	468	DSF6007DF	647	DSF6007TF
	800	289	DSF6008SF	438	DSF6008HF	562	DSF6008DF	776	DSF6008TF
	900	337	DSF6009SF	511	DSF6009HF	655	DSF6009DF	905	DSF6009TF
	1000	385	DSF6010SF	584	DSF6010HF	749	DSF6010DF	1035	DSF6010TF
	1100	433	DSF6011SF	657	DSF6011HF	843	DSF6011DF	1164	DSF6011TF
	1200	481	DSF6012SF	730	DSF6012HF	936	DSF6012DF	1293	DSF6012TF
	1300	530	DSF6013SF	803	DSF6013HF	1030	DSF6013DF	1422	DSF6013TF
	1400	578	DSF6014SF	876	DSF6014HF	1124	DSF6014DF	1552	DSF6014TF
	1500	626	DSF6015SF	949	DSF6015HF	1218	DSF6015DF	1681	DSF6015TF
	1600	674	DSF6016SF	1022	DSF6016HF	1311	DSF6016DF	1810	DSF6016TF
	1800	770	DSF6018SF	1168	DSF6018HF	1498	DSF608DF	2069	DSF6018TF
	2000	867	DSF6020SF	1314	DSF6020HF	1685	DSF6020DF	2328	DSF6020TF
	2200	963	DSF6022SF	1460	DSF6022HF	1873	DSF6022DF	2586	DSF6022TF
	2400	1059	DSF6024SF			2060	DSF6024DF	2845	DSF6024TF
	2600	1156	DSF6026SF			2247	DSF6026DF	3104	DSF6026TF
	2900	1300	DSF6029SF			2528	DSF6029DF	3492	DSF6029TF
	3200	1444	DSF6032SF			2809	DSF6032DF		
700	600	248	DSF7006SF	372	DSF7006HF	480	DSF7006DF		
	700	310	DSF7007SF	465	DSF7007HF	599	DSF7007DF	829	DSF7007TF
	800	372	DSF7008SF	558	DSF7008HF	719	DSF7008DF	995	DSF7008TF
	900	434	DSF7009SF	651	DSF7009HF	839	DSF7009DF	1161	DSF7009TF
	1000	496	DSF7010SF	744	DSF7010HF	959	DSF7010DF	1326	DSF7010TF
	1100	558	DSF7011SF	837	DSF7011HF	1079	DSF7011DF	1492	DSF7011TF
	1200	620	DSF7012SF	930	DSF7012HF	1199	DSF7012DF	1658	DSF7012TF
	1300	682	DSF7013SF	1023	DSF7013HF	1319	DSF7013DF	1824	DSF7013TF
	1400	744	DSF7014SF	1116	DSF7014HF	1439	DSF7014DF	1990	DSF7014TF
	1500	806	DSF7015SF	1209	DSF7015HF	1558	DSF7015DF	2155	DSF7015TF
	1600	868	DSF7016SF	1302	DSF7016HF	1678	DSF7016DF	2321	DSF7016TF
	1700	930	DSF7017SF	1395	DSF7017HF	1798	DSF7017DF		
	1800	993	DSF7018SF	1488	DSF7018HF	1918	DSF7018DF	2653	DSF7018TF
	2000	1117	DSF7020SF	1674	DSF7020HF	2158	DSF7020DF	2985	DSF7020TF
	2200	1241	DSF7022SF	1860	DSF7022HF	2398	DSF7022DF	3316	DSF7022TF
	2400	1365	DSF7024SF	2046	DSF7024HF	2637	DSF7024DF	3648	DSF7024TF
	2600	1489	DSF7026SF	2232	DSF7026HF	2877	DSF7026DF		
	2900	1675	DSF7029SF			3237	DSF7029DF		
	3200	1861	DSF7032SF			3596	DSF7032DF		
800	500	224	DSF8005SF			432	DSF8005DF		
	600	298	DSF8006SF	447	DSF8006HF	576	DSF8006DF		
	700	373	DSF8007SF	559	DSF8007HF	720	DSF8007DF	996	DSF8007TF
	800	447	DSF8008SF	671	DSF8008HF	865	DSF8008DF	1196	DSF8008TF
	900	522	DSF8009SF	783	DSF8009HF	1009	DSF8009DF	1395	DSF8009TF
	1000	597	DSF8010SF	895	DSF8010HF	1153	DSF8010DF	1594	DSF8010TF
	1100	671	DSF8011SF	1007	DSF8011HF	1297	DSF8011DF	1793	DSF8011TF
	1200	746	DSF8012SF	1119	DSF8012HF	1441	DSF8012DF	1993	DSF8012TF
	1300	820	DSF8013SF	1231	DSF8013HF	1585	DSF8013DF	2192	DSF8013TF
	1400	895	DSF8014SF	1342	DSF8014HF	1729	DSF8014DF	2391	DSF8014TF
	1500	970	DSF8015SF	1454	DSF8015HF	1873	DSF8015DF	2591	DSF8015TF
	1600	1044	DSF8016SF	1566	DSF8016HF	2017	DSF8016DF	2790	DSF8016TF
	1700	1119	DSF8017SF	1678	DSF8017HF	2161	DSF8017DF		
	1800	1193	DSF8018SF	1790	DSF8018HF	2305	DSF8018DF	3188	DSF8018TF
	2000	1342	DSF8020SF	2014	DSF8020HF	2594	DSF8020DF	3587	DSF8020TF
	2200	1492	DSF8022SF	2237	DSF8022HF	2882	DSF8022DF	3985	DSF8022TF
	2400	1641	DSF8024SF	2461	DSF8024HF	3170	DSF8024DF	4384	DSF8024TF
	2600	1790	DSF8026SF	2685	DSF8026HF	3458	DSF8026DF		
	2900	2014	DSF8029SF			3890	DSF8029DF		
	3200	2237	DSF8032SF			4323	DSF8032DF		

DeepClean - Sloping Top - Floor Mounted - Standard Grilles

Casing Depths: 145mm | 165mm | 200mm | 260mm

Deepclean - Sloping Top - Floor Mounted - Standard Grilles

Casing Height	Casing Length	SF/Type 11 Output Watts	SF/Type 11 Product Code	HF/Type 12 Output Watts	HF/Type 12 Product Code	DF/Type 22 Output Watts	DF/Type 22 Product Code	TF/Type 33 Output Watts	TF/Type 33 Product Code
900	500	259	DSF8005SF	389	DFF8550HF	499	DSF9005DF	690	DSF9005TF
	600	345	DSF8006SF	519	DFF8560HF	665	DSF9006DF	920	DSF9006TF
	700	432	DSF8007SF	649	DFF8570HF	832	DSF9007DF	1150	DSF9007TF
	800	518	DSF8008SF	778	DFF8580HF	998	DSF9008DF	1380	DSF9008TF
	900	604	DSF8009SF	908	DFF8590HF	1164	DSF9009DF	1610	DSF9009TF
	1000	691	DSF8010SF	1007	DFF8510HF	1331	DSF9010DF	1840	DSF9010TF
	1100	777	DSF8011SF	1038	DFF8511HF	1497	DSF9011DF	2070	DSF9011TF
	1200	863	DSF8012SF	1297	DFF8512HF	1663	DSF9012DF	2300	DSF9012TF
	1300	950	DSF8013SF	1427	DFF8513HF	1830	DSF9013DF	2530	DSF9013TF
	1400	1036	DSF8014SF	1556	DFF8514HF	1996	DSF9014DF	2760	DSF9014TF
	1500	1122	DSF8015SF	1686	DFF8515HF	2162	DSF9015DF		
	1600	1209	DSF8016SF	1816	DFF8516HF	2329	DSF9016DF	3220	DSF9016TF
	1700	1295	DSF8017SF	1946	DFF8517HF	2495	DSF9017DF		
	1800	1381	DSF8018SF	2075	DFF8518HF	2661	DSF9018DF	3680	DSF9018TF
	2000	1554	DSF8020SF	2334	DFF8520HF	2994	DSF9020DF	4140	DSF9020TF
	2200	1727	DSF8022SF	2593	DFF8522HF	3327	DSF9022DF	4600	DSF9022TF
	2400	1899	DSF8024SF	2852	DFF8524HF	3660	DSF9024DF	5059	DSF9024TF
	2600	2072	DSF8026SF	3112	DFF8526HF	3992	DSF9026DF		
	2900	2331	DSF8029SF			4491	DSF9029DF		
	3200	2590	DSF8032SF			4990	DSF9032DF		
1000	600	389	DSF1006SF	586	DSF1006HF	748	DSF1006DF	1032	DSF1006TF
	700	486	DSF1007SF	733	DSF1007HF	935	DSF1007DF	1290	DSF1007TF
	800	584	DSF1008SF	879	DSF1008HF	1121	DSF1008DF	1548	DSF1008TF
	900	681	DSF1009SF	1026	DSF1009HF	1308	DSF1009DF	1806	DSF1009TF
	1000	778	DSF1010SF	1173	DSF1010HF	1495	DSF1010DF	2064	DSF1010TF
	1100	875	DSF1011SF	1319	DSF1011HF	1682	DSF1011DF	2322	DSF1011TF
	1200	973	DSF1012SF	1466	DSF1012HF	1869	DSF1012DF	2580	DSF1012TF
	1300	1070	DSF1013SF	1612	DSF1013HF	2056	DSF1013DF	2838	DSF1013TF
	1400	1167	DSF1014SF	1759	DSF1014HF	2243	DSF1014DF	3096	DSF1014TF
	1500	1265	DSF1015SF	1906	DSF1015HF	2430	DSF1015DF	3354	DSF1015TF
	1600	1362	DSF1016SF	2052	DSF1016HF	2617	DSF1016DF	3612	DSF1016TF
	1700	1460	DSF1017SF			2804	DSF1017DF		
	1800	1556	DSF1018SF	2345	DSF1018HF	2990	DSF1018DF	4128	DSF1018TF
	2000	1751	DSF1020SF	2639	DSF1020HF	3364	DSF1020DF		
	2200	1946	DSF1022SF			3738	DSF1022DF		
	2400	2140	DSF1024SF			4112	DSF1024DF		
	2600	2335	DSF1026SF			4486	DSF1026DF		
	2900	2626	DSF1029SF			5046	DSF1029DF		
	3200	2918	DSF1032SF			5607	DSF1032DF		
1200	600	467	DSF1206SF	712	DSF1206HF	892	DSF1206DF	1227	DSF1206TF
	700	583	DSF1207SF	890	DSF1207HF	1116	DSF1207DF	1534	DSF1207TF
	800	700	DSF1208SF	1067	DSF1208HF	1339	DSF1208DF	1841	DSF1208TF
	900	817	DSF1209SF	1245	DSF1209HF	1562	DSF1209DF	2148	DSF1209TF
	1000	933	DSF1210SF	1424	DSF1210HF	1785	DSF1210DF	2455	DSF1210TF
	1100	1050	DSF1211SF			2008	DSF1211DF	2762	DSF1212TF
	1200	1167	DSF1212SF			2231	DSF1212DF	3069	DSF1212TF
	1300	1283	DSF1213SF			2454	DSF1213DF	3376	DSF1213TF
	1400	1400	DSF1214SF			2677	DSF1214DF	3682	DSF1214TF
	1500	1517	DSF1215SF			2901	DSF1215DF	3989	DSF1215TF
	1600	1634	DSF1216SF			3124	DSF1216DF	4296	DSF1216TF
	1800					3570	DSF1218DF		
	2000					4016	DSF1220DF		

All outputs are shown at a ΔT of 50. To calculate other ΔT requirements, please refer to page 103

Extended Lead Times

DeepClean - Standard Grilles Wall Mounted - Flat Top

Summary:

Manufacture:

- 1.5mm Zintec steel
- 10mm Radius edges / bullnose corners
- Patented full height front access door with hinge (Pat. No. 2 410 544)
- 5.5mm Punched grille
- Cut-outs programmed into manufacture
- Base Plate to underside of cover

Emitter:

- Compact steel panel radiators. EN 442 tested and certified
- Operating pressure 10 bar -(tested to 13 bar/188PSI)

Sizes

- Single casing length 600mm to 2000mm
- Single casing height 550mm to 1150mm
- Lengths over 2000mm can be achieved but will be modular design so some assembly required on site
- Bespoke solutions available

Valve options available:

- Internal TRV kit 9210-13
- External TRV kit 9330-41
- Remote sensing TRV kit 7463-41
- Anti-Ligature TRV kit 19352-41
- Rotarad rotating valve kit:
- RR04 Single Fin / RR05 Half Fin / RR06 Double Fin (not suitable for Triple Fin radiators))
- Alternative valve patterns and sizes are available upon request

Finish:

- Polyester powder coated RAL 9003 as standard. Other colour finishes available Patented BioCote® anti-microbial agent as standard

Fixings:

- All fixings internal
- 6mm Allen key door locks as standard
- Other options available

Technical Information & Specifications

Standard delivery

- Standard delivery comprises radiator guard of choice, corresponding Compact emitter (Single Fin, Half Fin, Double Fin and Triple Fin as specified) and the option of a 90 degree Herz ½" valve kit (suitable for 15mm copper to copper connection on a two-pipe system)
- An optional Rotarad rotary valve is available (not suitable for Triple Fin radiators)
- Split delivery* to reduce the risk of radiator casings becoming damaged or lost on site, Contour offer split deliveries as standard on all LST radiators. Radiators and valves are delivered first then once the heating system is installed, tested and commissioned, casings are delivered. This virtually eliminates storage problems and the risk of on-site damage.

  *Additional carriage charges will apply for multiple phases

Optional Extras

- Magnelis for wet rooms
- Different guages of material available
- Strengthening struts
- Door cables

Heat outputs to BS EN 442 Certification.

Outputs based on a mean radiator water temperature of 70°C and a room temperature of 20°C - Delta T 50°C

To acheive Delta T60 increase T50 figure by 20.5%

To calculate alternative Delta T requirements please refer to page 103

To convert BTU to Watts multiply by 0.293. To convert Watts to BTU divide by 0.293

Casing Depth			
Single Fin	Half Fin	Double Fin	Triple Fin
145mm	165mm	200mm	260mm

Casing Depths: 145mm, 165mm, 200mm, 260mm

Deepclean - Flat Top - Wall Mounted - Standard Grilles

Casing Height	Casing Length	SF/Type 11 Output Watts	SF/Type 11 Product Code	HF/Type 12 Output Watts	HF/Type 12 Product Code	DF/Type 22 Output Watts	DF/Type 22 Product Code	TF/Type 33 Output Watts	TF/Type 33 Product Code
550	600	197	DFW5506SF	298	DFW5506HF	383	DFW5506DF	529	DFW5506TF
	700	246	DFW5507SF	373	DFW5507HF	479	DFW5507DF	661	DFW5507TF
	800	295	DFW5508SF	448	DFW5508HF	574	DFW5506DF	793	DFW5508TF
	900	345	DFW5509SF	522	DFW5509HF	670	DFW5509DF	926	DFW5509TF
	1000	394	DFW5510SF	597	DFW5510HF	766	DFW5510DF	1058	DFW5510TF
	1100	443	DFW5511SF	672	DFW5511HF	862	DFW5511DF	1190	DFW5511TF
	1200	492	DFW5512SF	746	DFW5512HF	957	DFW5512DF	1322	DFW5512TF
	1300	542	DFW5513SF	821	DFW5513HF	1053	DFW5513DF	1454	DFW5513TF
	1400	591	DFW5514SF	895	DFW5514HF	1149	DFW5514DF	1587	DFW5514TF
	1500	640	DFW5515SF	970	DFW5515HF	1245	DFW5515DF	1719	DFW5515TF
	1600	689	DFW5516SF	1045	DFW5516HF	1340	DFW5516DF	1851	DFW5516TF
	1800	788	DFW5518SF	1194	DFW5518HF	1532	DFW5518DF	2116	DFW5518TF
	2000	886	DFW5520SF	1343	DFW5520HF	1723	DFW5520DF	2380	DFW5520TF
	2200	985	DFW5522SF	1492	DFW5522HF	1915	DFW5522DF	2644	DFW5522TF
	2400	1083	DFW5524SF			2106	DFW5524DF	2909	DFW5524TF
	2600	1182	DFW5526SF			2298	DFW5526DF	3173	DFW5526TF
	2900	1329	DFW5529SF			2585	DFW5529DF	3570	DFW5529TF
	3200	1477	DFW5532SF			2872	DFW5532DF		
650	600	254	DFW6506SF	380	DFW6506HF	490	DFW6506DF		
	700	317	DFW6507SF	475	DFW6507HF	613	DFW6507DF	848	DFW6507TF
	800	381	DFW6508SF	571	DFW6508HF	735	DFW6508DF	1017	DFW6508TF
	900	444	DFW6509SF	666	DFW6509HF	858	DFW6509DF	1187	DFW6509TF
	1000	507	DFW6510SF	761	DFW6510HF	981	DFW6510DF	1356	DFW6510TF
	1100	571	DFW6511SF	856	DFW6511HF	1103	DFW6511DF	1526	DFW6511TF
	1200	634	DFW6512SF	951	DFW6512HF	1226	DFW6512DF	1695	DFW6512TF
	1300	698	DFW6513SF	1046	DFW6513HF	1348	DFW6513DF	1865	DFW6513TF
	1400	761	DFW6514SF	1141	DFW6514HF	1471	DFW6514DF	2034	DFW6514TF
	1500	825	DFW6515SF	1236	DFW6515HF	1594	DFW6515DF	2204	DFW6515TF
	1600	888	DFW6516SF	1331	DFW6516HF	1716	DFW6516DF	2373	DFW6516TF
	1700	951	DFW6517SF	1426	DFW6517HF	1839	DFW6517DF		
	1800	1015	DFW6518SF	1522	DFW6518HF	1961	DFW6518DF	2713	DFW6518TF
	2000	1142	DFW6520SF	1712	DFW6520HF	2206	DFW6520DF	3052	DFW6520TF
	2200	1269	DFW6522SF	1902	DFW6522HF	2452	DFW6522DF	3391	DFW6522TF
	2400	1395	DFW6524SF	2092	DFW6524HF	2697	DFW6524DF	3730	DFW6524TF
	2600	1522	DFW6526SF	2282	DFW6526HF	2942	DFW6526DF		
	2900	1713	DFW6529SF			3310	DFW6529DF		
	3200	1903	DFW6532SF			3677	DFW6532DF		
750	500	229	DFW7505SF			442	DFW7505DF		
	600	305	DFW7506SF	458	DFW7506HF	589	DFW7506DF		
	700	381	DFW7507SF	572	DFW7507HF	737	DFW7507DF	1019	DFW7507TF
	800	458	DFW7508SF	686	DFW7508HF	884	DFW7508DF	1222	DFW7508TF
	900	534	DFW7509SF	801	DFW7509HF	1031	DFW7509DF	1426	DFW7509TF
	1000	610	DFW7510SF	915	DFW7510HF	1179	DFW7510DF	1630	DFW7510TF
	1100	686	DFW7511SF	1029	DFW7511HF	1326	DFW7511DF	1834	DFW7511TF
	1200	763	DFW7512SF	1144	DFW7512HF	1473	DFW7512DF	2037	DFW7512TF
	1300	839	DFW7513SF	1258	DFW7513HF	1621	DFW7513DF	2241	DFW7513TF
	1400	915	DFW7514SF	1373	DFW7514HF	1768	DFW7514DF	2445	DFW7514TF
	1500	991	DFW7515SF	1487	DFW7515HF	1915	DFW7515DF	2649	DFW7515TF
	1600	1068	DFW7516SF	1601	DFW7516HF	2063	DFW7516DF	2852	DFW7516TF
	1700	1144	DFW7517SF	1716	DFW7517HF	2210	DFW7517DF		
	1800	1220	DFW7518SF	1830	DFW7518HF	2357	DFW7518DF	3260	DFW7518TF
	2000	1373	DFW7520SF	2059	DFW7520HF	2652	DFW7520DF	3667	DFW7520TF
	2200	1525	DFW7522SF	2288	DFW7522HF	2947	DFW7522DF	4075	DFW7522TF
	2400	1678	DFW7524SF	2517	DFW7524HF	3241	DFW7524DF	4482	DFW7524TF
	2600	1830	DFW7526SF	2745	DFW7526HF	3536	DFW7526DF		
	2900	2059	DFW7529SF			3978	DFW7529DF		
	3200	2288	DFW7532SF			4420	DFW7532DF		

Casing Depths: 145mm, 165mm, 200mm, 260mm

Deepclean - Flat Top - Wall Mounted - Standard Grilles

Casing Height	Casing Length	SF/Type 11 Output Watts	SF/Type 11 Product Code	HF/Type 12 Output Watts	HF/Type 12 Product Code	DF/Type 22 Output Watts	DF/Type 22 Product Code	TF/Type 33 Output Watts	TF/Type 33 Product Code
850	500	265	DFW8505SF	398	DFW8505HF	510	DFW8505DF	705	DFW8505TF
	600	353	DFW8506SF	531	DFW8506HF	680	DFW8506DF	941	DFW8506TF
	700	441	DFW8507SF	663	DFW8507HF	850	DFW8507DF	1176	DFW8507TF
	800	530	DFW8508SF	795	DFW8508HF	1020	DFW8508DF	1411	DFW8508TF
	900	618	DFW8509SF	928	DFW8509HF	1191	DFW8509DF	1646	DFW8509TF
	1000	706	DFW8510SF	1061	DFW8510HF	1361	DFW8510DF	1881	DFW8510TF
	1100	794	DFW8511SF	1029	DFW8511HF	1531	DFW8511DF	2116	DFW8511TF
	1200	883	DFW8512SF	1326	DFW8512HF	1701	DFW8512DF	2351	DFW8512TF
	1300	971	DFW8513SF	1459	DFW8513HF	1871	DFW8513DF	2587	DFW8513TF
	1400	1059	DFW8514SF	1591	DFW8514HF	2041	DFW8514DF	2822	DFW8514TF
	1500	1148	DFW8515SF	1724	DFW8515HF	2211	DFW8515DF		
	1600	1236	DFW8516SF	1856	DFW8516HF	2381	DFW8516DF	3292	DFW8516TF
	1700	1324	DFW8517SF	1989	DFW8517HF	2551	DFW8517DF		
	1800	1412	DFW8518SF	2121	DFW8518HF	2721	DFW8518DF	3762	DFW8518TF
	2000	1589	DFW8520SF	2387	DFW8520HF	3061	DFW8520DF	4233	DFW8520TF
	2200	1765	DFW8522SF	2652	DFW8522HF	3402	DFW8522DF	4703	DFW8522TF
	2400	1942	DFW8524SF	2917	DFW8524HF	3742	DFW8524DF	5173	DFW8524TF
	2600	2118	DFW8526SF	3182	DFW8526HF	4082	DFW8526DF		
	2900	2383	DFW8529SF			4592	DFW8529DF		
	3200	2648	DFW8532SF			5102	DFW8532DF		
950	600	398	DFW9506SF	600	DFW9506HF	764	DFW9506DF	1055	DFW9506TF
	700	497	DFW9507SF	749	DFW9507HF	956	DFW9507DF	1319	DFW9507TF
	800	597	DFW9508SF	899	DFW9508HF	1147	DFW9508DF	1583	DFW9508TF
	900	696	DFW9509SF	1049	DFW9509HF	1338	DFW9509DF	1847	DFW9509TF
	1000	796	DFW9510SF	1199	DFW9510HF	1529	DFW9510DF	2110	DFW9510TF
	1100	895	DFW9511SF	1349	DFW9511HF	1720	DFW9511DF	2374	DFW9511TF
	1200	995	DFW9512SF	1499	DFW9512HF	1911	DFW9512DF	2638	DFW9512TF
	1300	1094	DFW9513SF	1649	DFW9513HF	2102	DFW9513DF	2902	DFW9513TF
	1400	1194	DFW9514SF	1799	DFW9514HF	2293	DFW9514DF	3166	DFW9514TF
	1500	1293	DFW9515SF	1948	DFW9515HF	2484	DFW9515DF	3430	DFW9515TF
	1600	1392	DFW9516SF	2098	DFW9516HF	2675	DFW9516DF	3693	DFW9516TF
	1700	1492	DFW9517SF			2867	DFW9517DF		
	1800	1591	DFW9518SF	2398	DFW9518HF	3058	DFW9518DF	4221	DFW9518TF
	2000	1790	DFW9520SF	2698	DFW9520HF	3440	DFW9520DF		
	2200	1989	DFW9522SF			3822	DFW9522DF		
	2400	2188	DFW9524SF			4204	DFW9524DF		
	2600	2387	DFW9526SF			4586	DFW9526DF		
	2900	2686	DFW9529SF			5160	DFW9529DF		
	3200	2984	DFW9532SF			5733	DFW9532DF		
1150	600	477	DFW1106SF	728	DFW1106HF	913	DFW1106DF	1255	DFW1106TF
	700	597	DFW1107SF	910	DFW1107HF	1141	DFW1107DF	1569	DFW1107TF
	800	716	DFW1108SF	1091	DFW1108HF	1369	DFW1108DF	1883	DFW1108TF
	900	835	DFW1109SF	1273	DFW1109HF	1597	DFW1109DF	2196	DFW1109TF
	1000	954	DFW1110SF	1456	DFW1110HF	1825	DFW1110DF	2510	DFW1110TF
	1100	1074	DFW1111SF			2053	DFW1111DF	2824	DFW1111TF
	1200	1193	DFW1112SF			2281	DFW1112DF	3138	DFW1112TF
	1300	1312	DFW1113SF			2510	DFW1113DF	3451	DFW1113TF
	1400	1432	DFW1114SF			2738	DFW1114DF	3765	DFW1114TF
	1500	1551	DFW1115SF			2966	DFW1115DF	4079	DFW1115TF
	1600	1670	DFW1116SF			3194	DFW1116DF	4393	DFW1116TF
	1800					3650	DFW1118DF		
	2000					4106	DFW1120DF		

All outputs are shown at a ΔT of 50. To calculate other ΔT requirements, please refer to page 103

Extended Lead Times

Deepclean - Standard Grilles

Wall Mounted - Sloping Top

Summary:

Manufacture:

- 1.5mm Zintec steel
- 10mm Radius edges / bullnose corners
- Patented full height front access door with hinge (Pat. No. 2 410 544)
- 5.5mm Punched grille
- Cut-outs programmed into manufacture
- Base Plate to underside of cover

Emitter:

- Compact steel panel radiators. EN 442 tested and certified
- Operating pressure 10 bar -(tested to 13 bar/188PSI)

Sizes

- Single casing length 600mm to 2000mm
- Single casing height 550mm to 1150mm
- Lengths over 2000mm can be achieved but will be modular design so some assembly required on site
- Bespoke solutions available

Valve options available:

- Internal TRV kit 9210-13
- External TRV kit 9330-41
- Remote sensing TRV kit 7463-41
- Anti-Ligature TRV kit 19352-41
- Rotarad rotating valve kit:
  RR04 Single Fin / RR05 Half Fin / RR06 Double Fin (not suitable for Triple Fin radiators)
- Alternative valve patterns and sizes are available upon request

Finish:

- Polyester powder coated RAL 9003 as standard. Other colour finishes available Patented BioCote® anti-microbial agent as standard

Fixings:

- All fixings internal
- 6mm Allen key door locks as standard
- Other secure options available

Technical Information & Specifications

Standard delivery

- Standard delivery comprises radiator guard of choice, corresponding Compact emitter (Single Fin, Half Fin, Double Fin and Triple Fin as specified) and the option of a 90 degree Herz ½" valve kit (suitable for 15mm copper to copper connection on a two-pipe system)
- An optional Rotarad rotary valve is available (not suitable for Triple Fin radiators)
- Split delivery* to reduce the risk of radiator casings becoming damaged or lost on site, Contour offer split deliveries as standard on all LST radiators. Radiators and valves are delivered first then once the heating system is installed, tested and commissioned, casings are delivered. This virtually eliminates storage problems and the risk of on-site damage.

  *Additional carriage charges will apply for multiple phases

Optional Extras

- Magnelis for wet rooms
- Different guages of material available
- Strengthening struts
- Door cables

Heat outputs to BS EN 442 Certification.

Outputs based on a mean radiator water temperature of 70°C and a room temperature of 20°C - Delta T 50°C

To acheive Delta T60 increase T50 figure by 20.5%

To calculate alternative Delta T requirements please refer to page 103

To convert BTU to Watts multiply by 0.293. To convert Watts to BTU divide by 0.293

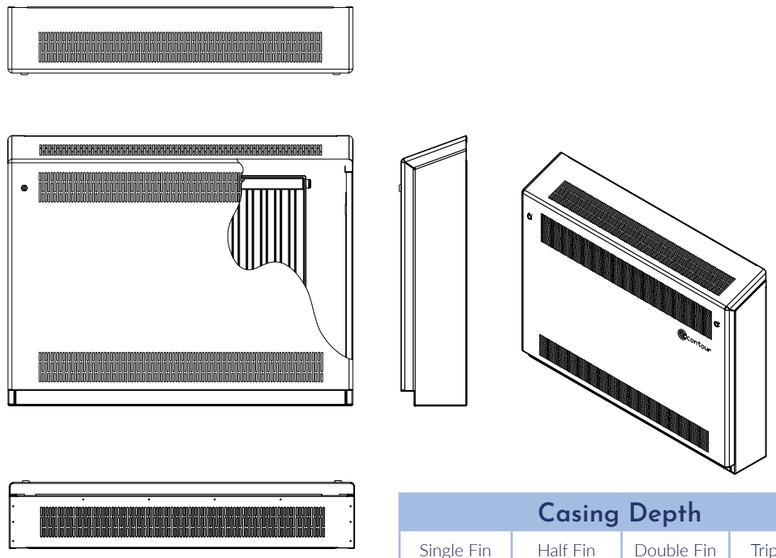

Casing Depth			
Single Fin	Half Fin	Double Fin	Triple Fin
145mm	165mm	200mm	260mm

Casing Depths: 145mm, 165mm, 200mm, 260mm

Deepclean - Sloping Top - Wall Mounted - Standard Grilles

Casing Height	Casing Length	SF/Type 11 Output Watts	SF/Type 11 Product Code	HF/Type 12 Output Watts	HF/Type 12 Product Code	DF/Type 22 Output Watts	DF/Type 22 Product Code	TF/Type 33 Output Watts	TF/Type 33 Product Code
600	600	197	DSW6006SF	298	DSW6006HF	383	DSW6006DF	529	DSW6006TF
	700	246	DSW6007SF	373	DSW6007HF	479	DSW6007DF	661	DSW6007TF
	800	295	DSW6008SF	448	DSW6008HF	574	DSW6008DF	793	DSW6008TF
	900	345	DSW6009SF	522	DSW6009HF	670	DSW6009DF	926	DSW6009TF
	1000	394	DSW6010SF	597	DSW6010HF	766	DSW6010DF	1058	DSW6010TF
	1100	443	DSW6011SF	672	DSW6011HF	862	DSW6011DF	1190	DSW6011TF
	1200	492	DSW6012SF	746	DSW6012HF	957	DSW6012DF	1322	DSW6012TF
	1300	542	DSW6013SF	821	DSW6013HF	1053	DSW6013DF	1454	DSW6013TF
	1400	591	DSW6014SF	895	DSW6014HF	1149	DSW6014DF	1587	DSW6014TF
	1500	640	DSW6015SF	970	DSW6015HF	1245	DSW6015DF	1719	DSW6015TF
	1600	689	DSW6016SF	1045	DSW6016HF	1340	DSW6016DF	1851	DSW6016TF
	1800	788	DSW6018SF	1194	DSW6018HF	1532	DSW6018DF	2116	DSW6018TF
	2000	886	DSW6020SF	1343	DSW6020HF	1723	DSW6020DF	2380	DSW6020TF
	2200	985	DSW6022SF	1492	DSW6022HF	1915	DSW6022DF	2644	DSW6022TF
	2400	1083	DSW6024SF			2106	DSW6024DF	2909	DSW6024TF
	2600	1182	DSW6026SF			2298	DSW6026DF	3173	DSW6026TF
	2900	1329	DSW6029SF			2585	DSW6029DF	3570	DSW6029TF
	3200	1477	DSW6032SF			2872	DSW6032DF		
700	600	254	DSW7006SF	380	DSW7006HF	490	DSW7006DF		
	700	317	DSW7007SF	475	DSW7007HF	613	DSW7007DF	848	DSW7007TF
	800	381	DSW7008SF	571	DSW7008HF	735	DSW7008DF	1017	DSW7008TF
	900	444	DSW7009SF	666	DSW7009HF	858	DSW7009DF	1187	DSW7009TF
	1000	507	DSW7010SF	761	DSW7010HF	981	DSW7010DF	1356	DSW7010TF
	1100	571	DSW7011SF	856	DSW7011HF	1103	DSW7011DF	1526	DSW7011TF
	1200	634	DSW7012SF	951	DSW7012HF	1226	DSW7012DF	1695	DSW7012TF
	1300	698	DSW7013SF	1046	DSW7013HF	1348	DSW7013DF	1865	DSW7013TF
	1400	761	DSW7014SF	1141	DSW7014HF	1471	DSW7014DF	2034	DSW7014TF
	1500	825	DSW7015SF	1236	DSW7015HF	1594	DSW7015DF	2204	DSW7015TF
	1600	888	DSW7016SF	1331	DSW7016HF	1716	DSW7016DF	2373	DSW7016TF
	1700	951	DSW7017SF	1426	DSW7017HF	1839	DSW7017DF		
	1800	1015	DSW7018SF	1522	DSW7018HF	1961	DSW7018DF	2713	DSW7018TF
	2000	1142	DSW7020SF	1712	DSW7020HF	2206	DSW7020DF	3052	DSW7020TF
	2200	1269	DSW7022SF	1902	DSW7022HF	2452	DSW7022DF	3391	DSW7022TF
	2400	1395	DSW7024SF	2092	DSW7024HF	2697	DSW7024DF	3730	DSW7024TF
	2600	1522	DSW7026SF	2282	DSW7026HF	2942	DSW7026DF		
	2900	1713	DSW7029SF			3310	DSW7029DF		
	3200	1903	DSW7032SF			3677	DSW7032DF		
800	500	229	DSW8005SF			442	DSW8005DF		
	600	305	DSW8006SF	458	DSW8006HF	589	DSW8006DF		
	700	381	DSW8007SF	572	DSW8007HF	737	DSW8007DF	1019	DSW8007TF
	800	458	DSW8008SF	686	DSW8008HF	884	DSW8008DF	1222	DSW8008TF
	900	534	DSW8009SF	801	DSW8009HF	1031	DSW8009DF	1426	DSW8009TF
	1000	610	DSW8010SF	915	DSW8010HF	1179	DSW8010DF	1630	DSW8010TF
	1100	686	DSW8011SF	1029	DSW8011HF	1326	DSW8011DF	1834	DSW8011TF
	1200	763	DSW8012SF	1144	DSW8012HF	1473	DSW8012DF	2037	DSW8012TF
	1300	839	DSW8013SF	1258	DSW8013HF	1621	DSW8013DF	2241	DSW8013TF
	1400	915	DSW8014SF	1373	DSW8014HF	1768	DSW8014DF	2445	DSW8014TF
	1500	991	DSW8015SF	1487	DSW8015HF	1915	DSW8015DF	2649	DSW8015TF
	1600	1068	DSW8016SF	1601	DSW8016HF	2063	DSW8016DF	2852	DSW8016TF
	1700	1144	DSW8017SF	1716	DSW8017HF	2210	DSW8017DF		
	1800	1220	DSW8018SF	1830	DSW8018HF	2357	DSW8018DF	3260	DSW8018TF
	2000	1373	DSW8020SF	2059	DSW8020HF	2652	DSW8020DF	3667	DSW8020TF
	2200	1525	DSW8022SF	2288	DSW8022HF	2947	DSW8022DF	4075	DSW8022TF
	2400	1678	DSW8024SF	2517	DSW8024HF	3241	DSW8024DF	4482	DSW8024TF
	2600	1830	DSW8026SF	2745	DSW8026HF	3536	DSW8026DF		
	2900	2059	DSW8029SF			3978	DSW8029DF		
	3200	2288	DSW8032SF			4420	DSW8032DF		

DeepClean -Sloping Top - Wall Mounted - Standard Grilles

Casing Depths: 145mm, 165mm, 200mm, 260mm

Deepclean - Sloping Top - Wall Mounted - Standard Grilles

Casing Height	Casing Length	SF/Type 11 Output Watts	SF/Type 11 Product Code	HF/Type 12 Output Watts	HF/Type 12 Product Code	DF/Type 22 Output Watts	DF/Type 22 Product Code	TF/Type 33 Output Watts	TF/Type 33 Product Code
900	500	265	DSW9005SF	398	DSW9005HF	510	DSW9005DF	705	DSW9005TF
	600	353	DSW9006SF	531	DSW9006HF	680	DSW9006DF	941	DSW9006TF
	700	441	DSW9007SF	663	DSW9007HF	850	DSW9007DF	1176	DSW9007TF
	800	530	DSW9008SF	795	DSW9008HF	1020	DSW9008DF	1411	DSW9008TF
	900	618	DSW9009SF	928	DSW9009HF	1191	DSW9009DF	1646	DSW9009TF
	1000	706	DSW9010SF	1061	DSW9010HF	1361	DSW9010DF	1881	DSW9010TF
	1100	794	DSW9011SF	1029	DSW9011HF	1531	DSW9011DF	2116	DSW9011TF
	1200	883	DSW9012SF	1326	DSW9012HF	1701	DSW9012DF	2351	DSW9012TF
	1300	971	DSW9013SF	1459	DSW9013HF	1871	DSW9013DF	2587	DSW9013TF
	1400	1059	DSW9014SF	1591	DSW9014HF	2041	DSW9014DF	2822	DSW9014TF
	1500	1148	DSW9015SF	1724	DSW9015HF	2211	DSW9015DF		
	1600	1236	DSW9016SF	1856	DSW9016HF	2381	DSW9016DF	3292	DSW9016TF
	1700	1324	DSW9017SF	1989	DSW9017HF	2551	DSW9017DF		
	1800	1412	DSW9018SF	2121	DSW9018HF	2721	DSW9018DF	3762	DSW9018TF
	2000	1589	DSW9020SF	2387	DSW9020HF	3061	DSW9020DF	4233	DSW9020TF
	2200	1765	DSW9022SF	2652	DSW9022HF	3402	DSW9022DF	4703	DSW9022TF
	2400	1942	DSW9024SF	2917	DSW9024HF	3742	DSW9024DF	5173	DSW9024TF
	2600	2118	DSW9026SF	3182	DSW9026HF	4082	DSW9026DF		
	2900	2383	DSW9029SF			4592	DSW9029DF		
	3200	2648	DSW9032SF			5102	DSW9032DF		
1000	600	398	DSW1006SF	600	DSW1006HF	764	DSW1006DF	1055	DSW1006TF
	700	497	DSW1007SF	749	DSW1007HF	956	DSW1007DF	1319	DSW1007TF
	800	597	DSW1008SF	899	DSW1008HF	1147	DSW1008DF	1583	DSW1008TF
	900	696	DSW1009SF	1049	DSW1009HF	1338	DSW1009DF	1847	DSW1009TF
	1000	796	DSW1010SF	1199	DSW1010HF	1529	DSW1010DF	2110	DSW1010TF
	1100	895	DSW1011SF	1349	DSW1011HF	1720	DSW1011DF	2374	DSW1011TF
	1200	995	DSW1012SF	1499	DSW1012HF	1911	DSW1012DF	2638	DSW1012TF
	1300	1094	DSW1013SF	1649	DSW1013HF	2102	DSW1013DF	2902	DSW1013TF
	1400	1194	DSW1014SF	1799	DSW1014HF	2293	DSW1014DF	3166	DSW1014TF
	1500	1293	DSW1015SF	1948	DSW1015HF	2484	DSW1015DF	3430	DSW1015TF
	1600	1392	DSW1016SF	2098	DSW1016HF	2675	DSW1016DF	3693	DSW1016TF
	1700	1492	DSW1017SF			2867	DSW1017DF		
	1800	1591	DSW1018SF	2398	DSW1018HF	3058	DSW1018DF	4221	DSW1018TF
	2000	1790	DSW1020SF	2698	DSW1020HF	3440	DSW1020DF		
	2200	1989	DSW1022SF			3822	DSW1022DF		
	2400	2188	DSW1024SF			4204	DSW1024DF		
	2600	2387	DSW1026SF			4586	DSW1026DF		
	2900	2686	DSW1029SF			5160	DSW1029DF		
	3200	2984	DSW1032SF			5733	DSW1032DF		
1200	600	477	DSW1206SF	728	DSW1206HF	913	DSW1206DF	1255	DSW1206TF
	700	597	DSW1207SF	910	DSW1207HF	1141	DSW1207DF	1569	DSW1207TF
	800	716	DSW1208SF	1091	DSW1208HF	1369	DSW1208DF	1883	DSW1208TF
	900	835	DSW1209SF	1273	DSW1209HF	1597	DSW1209DF	2196	DSW1209TF
	1000	954	DSW1210SF	1456	DSW1210HF	1825	DSW1210DF	2510	DSW1210TF
	1100	1074	DSW1211SF			2053	DSW1211DF	2824	DSW1212TF
	1200	1193	DSW1212SF			2281	DSW1212DF	3138	DSW1212TF
	1300	1312	DSW1213SF			2510	DSW1213DF	3451	DSW1213TF
	1400	1432	DSW1214SF			2738	DSW1214DF	3765	DSW1214TF
	1500	1551	DSW1215SF			2966	DSW1215DF	4079	DSW1215TF
	1600	1670	DSW1216SF			3194	DSW1216DF	4393	DSW1216TF
	1800					3650	DSW1218DF		
	2000					4106	DSW1220DF		

All outputs are shown at a ΔT of 50. To calculate other ΔT requirements, please refer to page 103

Extended Lead Times

Vertical LST Radiator

For applications where space is at a premium, Contour's Vertical LST radiator is the ideal solution. Available with standard or anti-ligature grilles, the Vertical LSTs come with a streamlined, flat-panel outer casing and are suited to a range of different environments.

A vertical LST radiator is designed to suit whatever space you have available and to maintain high standards for your heating solutions.

Areas such as bathrooms are often small, especially in residential care homes, where they are designed as en-suites. Here, narrow LST radiators are required. Additionally, in school halls and other spaces with narrow wall areas, a vertical LST radiator can be installed to give the space the best possible heating without dominating the walls. In these areas, it can be difficult to find the right amount of wall space to provide adequate heating. This is where vertical LST radiators can be a huge benefit.

Because wall space is limited, having a radiator that uses the height of the wall rather than the width means that less space is lost, leaving more room for additional appliances or safety features. Vertical LST radiators can be installed behind doors or be wall-mounted to leave as much floor space as possible.

In communal areas, such as in GP surgery waiting rooms, a vertical LST radiator can enhance the usability of the space by opening up more areas for furniture, such as seats, which may have otherwise been restricted.

Contour's Vertical LST comes with BioCote® anti-microbial protection to ensure safety standards for hygiene are met. The presence of this anti-microbial technology, offers a 99.5% reduction in bacteria levels in under 2 hours.

Vertical LST Radiators

Summary:

Manufacture:

- 1.5mm Zintec steel
- 10mm Radius edges / bullnose corners
- Patented full height front access door with hinge (Pat. No. 2 410 544)
- 5.5mm Punched grille
- Cut-outs programmed into manufacture

Emitter:

- Vertical steel radiators
- 6 Bar Max Operating Pressure
- EN442 Tested and Certified

Sizes

- Single Casing Lengths 400mm - 1100mm
- Single Casing Heights 1900mm - 2300mm
- Bespoke solutions available

Valve options available:

- Internal TRV kit 9210-13
- External TRV kit 9330-41
- Remote sensing TRV kit 7463-41
- Alternative valve patterns and sizes are available upon request

Finish:

- Polyester powder coated RAL 9003 as standard. Other colour finishes available Patented BioCote® anti-microbial agent as standard

Fixings:

- All fixings internal
- 6mm Allen key door as standard
- Other secure options available

Technical Information & Specifications

Standard delivery

- Standard delivery comprises radiator guard of choice, corresponding vertical radiator and the option of a 90degree Herz ½" valve kit (suitable for 15mm copper to copper connection on a two-pipe system)
- Split delivery* to reduce the risk of radiator casings becoming damaged or lost on site, Contour offer split deliveries as standard on all LST radiators. Radiators and valves are delivered first then once the heating system is installed, tested and commissioned, casings are delivered. This virtually eliminates storage problems and the risk of on-site damage.

  *Additional carriage charges will apply for multiple phases

Optional Extras

- Magnelis for wet rooms
- Different guages of material available
- Strengthening struts
- Door cables
- Base Plate to underside of cover on wall mounted version

Heat outputs to BS EN 442 Certification.

Outputs based on a mean radiator water temperature of 70°C and a room temperature of 20°C - Delta T 50°C

To acheive Delta T60 increase T50 figure by 20.5%

To calculate alternative Delta T requirements please refer to page 103

To convert BTU to Watts multiply by 0.293. To convert Watts to BTU divide by 0.293

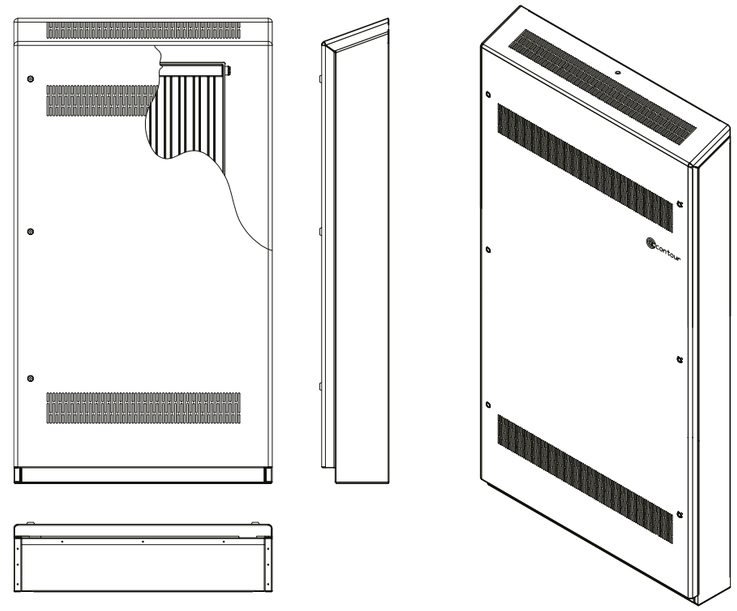

Casing Depth	
Half Fin 165mm	Double Fin 195mm

Deepclean - Vertical - Standard Grilles					
Casing Height	Casing Length	Half Fin		Double Fin	
		Output Watts ΔT 50	Product Code	Output Watts ΔT 50	Product Code
1900	400	603	DVSF1904HF		
	500	753	DVSF1905HF	993	DVSF1905DF
	600	968	DVSF1906HF	1266	DVSF1906DF
	700	1177	DVSF1907HF	1538	DVSF1907DF
	800	1383	DVSF1908HF	1810	DVSF1908DF
	900	1583	DVSF1909HF	2112	DVSF1909DF
	1100	2035	DVSF1911HF	2715	DVSF1911DF
2100	400	677	DVSF2104HF		
	500	821	DVSF2105HF	1039	DVSF2105DF
	600	1056	DVSF2106HF	1345	DVSF2106DF
	700	1286	DVSF2107HF	1651	DVSF2107DF
	800	1501	DVSF2108HF	1955	DVSF2108DF
	900	1728	DVSF2109HF	2282	DVSF2109DF
	1100	2222	DVSF2111HF	2933	DVSF2111DF
2300	400	753	DVSF2304HF		
	500	886	DVSF2305HF	1121	DVSF2305DF
	600	1142	DVSF2306HF	1449	DVSF2306DF
	700	1389	DVSF2307HF	1779	DVSF2307DF
	800	1631	DVSF2308HF	2109	DVSF2308DF
	900	1868	DVSF2309HF	2461	DVSF2309DF
	1100	2402	DVSF2311HF	3163	DVSF2311DF

All outputs are shown at a ΔT of 50. To calculate other ΔT requirements, please refer to page 103

Extended Lead Times

DeepClean Extra Radiator

Central to Contour's product offer is a specialist range of heating solutions designed and engineered to minimise the risk of self-harm and for installation in secure environments, such as mental health facilities, prisons, SEN Schools, custody and remand units.

Removing potential tamper opportunities and ligature points in locations such as these, are key considerations.

Contour's anti-ligature radiators make use of a grille design incorporating 2mm holes at 4mm centres, punched directly into the radiator guard. This has been tested to IP3x standards (BS EN 60529) by a UKAS accredited laboratory, and is certified to protect against the ingress of objects greater than 2.5mm in diameter.

Anti-ligature TRV kits are also available to allow service users take control of their heating to increase comfort levels. The CNC aluminium shroud gives protection to the TRV whilst minimising the the risk of someone being able to tie something around it.

DeepClean Extra Radiator

Whether it's the full drop down door or the IP3x grilles, the DeepClean Extra Radiator boasts numerous benefits to the user. Combined with its BioCote® anti-microbial technology and optional rotatory valve kits, these make for the perfect solution in hygiene control.

An array of security fastenings which include Pin Hex and key locks can be used to ensure fast and simple access for staff but prevent unwanted opening by service users

All wall and floor fixing points are located internally to protect against non-permitted access, removal or manipulation

Full frame design so cover can be sealed to the wall around the full perimeter

Magnelis steel can be chosen for wet and humid environments such as ensuite bathrooms.

Radius edges and bullnose corners protect in the event of a slip or fall, and prevent an anti-ligature radiator being used to self-harm

A tapered, precision engineered, thermostatic radiator valve shroud which reduces the opportunity for the TRV to be used as an anchor point

1.5-2mm Zintec Steel construction ensures robust performance in the most demanding of environments

For wall mounted anti-ligature radiators, anti-ligature base plates can be securely fixed to the base of a unit

Patented easy to open front panel that can lie flat to floor when fully open. The design also facilitates complete removal of the door if required

DeepClean Extra models

DeepClean Extra radiators and guards are available in three models:

1.
Floor mounted / flat top

2.
Floor mounted / sloping top

3.
Wall mounted / sloping top

DeepClean Extra colour options

DeepClean radiator guards are available in a wide range of colours, including:

White RAL9003

Oyster White RAL1013

Tele Grey RAL7047

Mint Green RAL6029

Ultramarine RAL5002

Jet Black RAL9005

1

2

3

DeepClean Extra

Floor Mounted - Flat Top

Summary:

Manufacture:

- Full frame design
- 1.5mm Zintec steel
- 10mm Radius edges / bullnose corners
- Patented full height front access door with hinge (Pat. No. 2 410 544)
- IP3x rated 2mm dia holes @ 4mm centres in a triangular pitch formation punched grille
- Cut-outs programmed into manufacture

Emitter:

- Compact steel panel radiators. EN 442 tested and certified
- Operating pressure 10 bar -(tested to 13 bar/188PSI)

Sizes:

- Single casing length 600mm to 2000mm
- Single casing height 600mm to 1200mm
- Lengths over 2000mm can be achieved but will be modular design so some assembly required on site
- Bespoke solutions available

Valve options available:

- Internal TRV kit 9210-13
- Remote sensing TRV kit 7463-41
- External Back To Wall Anti-Ligature TRV kit 19352-41
- Rotarad rotating valve kit:
  RR04 Single Fin / RR05 Half Fin / RR06 Double Fin (not suitable for Triple Fin radiators)
- Alternative valve patterns and sizes are available upon request

Finish:

- Polyester powder coated RAL 9003 as standard. Other colour finishes available
- Patented BioCote® anti-microbial agent as standard

Fixings:

- All fixings internal
- 8mm Pinhex Locks

Technical Information & Specifications

Standard delivery

- Standard delivery comprises radiator guard of choice, corresponding Compact emitter (Single Fin, Half Fin, Double Fin and Triple Fin as specified) and the option of a 90degree Herz ½" valve kit (suitable for 15mm copper to copper connection on a two-pipe system)
- An optional Rotarad rotary valve is available (not suitable for Triple Fin radiators)
- Split delivery* to reduce the risk of radiator casings becoming damaged or lost on site, Contour offer split deliveries as standard on all LST radiators. Radiators and valves are delivered first then once the heating system is installed, tested and commissioned, casings are delivered. This virtually eliminates storage problems and the risk of on-site damage.

*Additional carriage charges will apply for multiple phases

Optional Extras

- Magnelis for wet rooms
- Different guages of material available
- Strengthening struts
- Door cables

Heat Outputs to BS EN 442 Certification.

Outputs based on a mean radiator water temperature of 70°C and a room temperature of 20°C - Delta T 50°C

To achieve Delta T60 increase T50 figures by 20.5%

To calculate alternative Delta T requirements please refer to page 103

To convert BTU to Watts multiply by 0.293. To convert Watts to BTU divide by 0.293

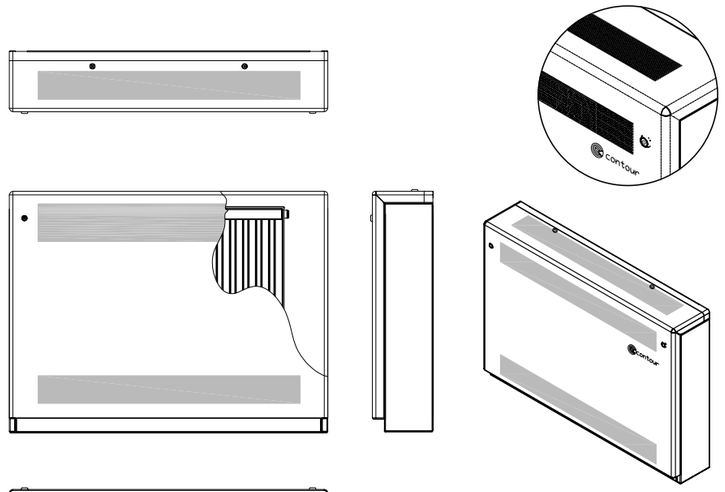

Casing Depth			
Single Fin	Half Fin	Double Fin	Triple Fin
150mm	165mm	200mm	260mm

Please note:

The grille size used in anti-ligature radiator guards can inhibit the convection process. Therefore Contour cannot guarantee that the casing will not exceed a surface temperature of 43°C.

Casing Depths: 150mm | 165mm | 200mm | 260mm

Deepclean Extra - Floor Mounted - Flat Top

Casing Height	Casing Length	SF/Type 11 Output Watts	SF/Type 11 Product Code	HF/Type 12 Output Watts	HF/Type 12 Product Code	DF/Type 22 Output Watts	DF/Type 22 Product Code	TF/Type 33 Output Watts	TF/Type 33 Product Code
550	600	173	DEFF5506SF	262	DEFF5506HF	337	DEFF5506DF	465	DEFF5506TF
	700	216	DEFF5507SF	328	DEFF5507HF	421	DEFF5507DF	581	DEFF5507TF
	800	260	DEFF5508SF	394	DEFF5508HF	505	DEFF5508DF	697	DEFF5508TF
	900	303	DEFF5509SF	459	DEFF5509HF	589	DEFF5509DF	814	DEFF5509TF
	1000	346	DEFF5510SF	525	DEFF5510HF	673	DEFF5510DF	930	DEFF5510TF
	1100	390	DEFF5511SF	590	DEFF5511HF	757	DEFF5511DF	1046	DEFF5511TF
	1200	433	DEFF5512SF	656	DEFF5512HF	842	DEFF5512DF	1162	DEFF5512TF
	1300	476	DEFF5513SF	722	DEFF5513HF	926	DEFF5513DF	1279	DEFF5513TF
	1400	519	DEFF5514SF	787	DEFF5514HF	1010	DEFF5514DF	1395	DEFF5514TF
	1500	563	DEFF5515SF	853	DEFF5515HF	1094	DEFF5515DF	1511	DEFF5515TF
	1600	606	DEFF5516SF	918	DEFF5516HF	1178	DEFF5516DF	1627	DEFF5516TF
	1800	692	DEFF5518SF	1050	DEFF5518HF	1347	DEFF5518DF	1860	DEFF5518TF
	2000	779	DEFF5520SF	1181	DEFF5520HF	1515	DEFF5520DF	2092	DEFF5520TF
	2200	866	DEFF5522SF	1312	DEFF5522HF	1683	DEFF5522DF	2325	DEFF5522TF
	2400	952	DEFF5524SF			1852	DEFF5524DF	2557	DEFF5524TF
	2600	1039	DEFF5526SF			2020	DEFF5526DF	2790	DEFF5526TF
	2900	1169	DEFF5529SF			2272	DEFF5529DF	3138	DEFF5529TF
	3200	1298	DEFF5532SF			2525	DEFF5532DF		
650	600	223	DEFF6506SF	334	DEFF6506HF	431	DEFF6506DF		
	700	279	DEFF6507SF	418	DEFF6507HF	539	DEFF6507DF	745	DEFF6507TF
	800	335	DEFF6508SF	502	DEFF6508HF	647	DEFF6508DF	894	DEFF6508TF
	900	390	DEFF6509SF	585	DEFF6509HF	754	DEFF6509DF	1043	DEFF6509TF
	1000	446	DEFF6510SF	669	DEFF6510HF	862	DEFF6510DF	1192	DEFF6510TF
	1100	502	DEFF6511SF	752	DEFF6511HF	970	DEFF6511DF	1341	DEFF6511TF
	1200	558	DEFF6512SF	836	DEFF6512HF	1078	DEFF6512DF	1490	DEFF6512TF
	1300	613	DEFF6513SF	920	DEFF6513HF	1185	DEFF6513DF	1639	DEFF6513TF
	1400	669	DEFF6514SF	1003	DEFF6514HF	1293	DEFF6514DF	1788	DEFF6514TF
	1500	725	DEFF6515SF	1087	DEFF6515HF	1401	DEFF6515DF	1938	DEFF6515TF
	1600	781	DEFF6516SF	1170	DEFF6516HF	1509	DEFF6516DF	2087	DEFF6516TF
	1700	836	DEFF6517SF	1254	DEFF6517HF	1616	DEFF6517DF		
	1800	892	DEFF6518SF	1338	DEFF6518HF	1724	DEFF6518DF	2385	DEFF6518TF
	2000	1004	DEFF6520SF	1505	DEFF6520HF	1940	DEFF6520DF	2683	DEFF6520TF
	2200	1115	DEFF6522SF	1672	DEFF6522HF	2155	DEFF6522DF	2981	DEFF6522TF
	2400	1227	DEFF6524SF	1839	DEFF6524HF	2371	DEFF6524DF	3279	DEFF6524TF
	2600	1338	DEFF6526SF	2006	DEFF6526HF	2586	DEFF6526DF		
	2900	1506	DEFF6529SF			2910	DEFF6529DF		
	3200	1673	DEFF6532SF			3233	DEFF6532DF		
750	500	201	DEFF7505SF			389	DEFF7505DF		
	600	268	DEFF7506SF	402	DEFF7506HF	518	DEFF7506DF		
	700	335	DEFF7507SF	503	DEFF7507HF	648	DEFF7507DF	896	DEFF7507TF
	800	402	DEFF7508SF	603	DEFF7508HF	777	DEFF7508DF	1075	DEFF7508TF
	900	469	DEFF7509SF	704	DEFF7509HF	907	DEFF7509DF	1254	DEFF7509TF
	1000	536	DEFF7510SF	804	DEFF7510HF	1036	DEFF7510DF	1433	DEFF7510TF
	1100	603	DEFF7511SF	905	DEFF7511HF	1166	DEFF7511DF	1612	DEFF7511TF
	1200	670	DEFF7512SF	1006	DEFF7512HF	1295	DEFF7512DF	1791	DEFF7512TF
	1300	737	DEFF7513SF	1106	DEFF7513HF	1425	DEFF7513DF	1970	DEFF7513TF
	1400	804	DEFF7514SF	1207	DEFF7514HF	1554	DEFF7514DF	2149	DEFF7514TF
	1500	872	DEFF7515SF	1307	DEFF7515HF	1684	DEFF7515DF	2329	DEFF7515TF
	1600	939	DEFF7516SF	1408	DEFF7516HF	1813	DEFF7516DF	2508	DEFF7516TF
	1700	1006	DEFF7517SF	1508	DEFF7517HF	1943	DEFF7517DF		
	1800	1073	DEFF7518SF	1609	DEFF7518HF	2072	DEFF7518DF	2866	DEFF7518TF
	2000	1207	DEFF7520SF	1810	DEFF7520HF	2331	DEFF7520DF	3224	DEFF7520TF
	2200	1341	DEFF7522SF	2011	DEFF7522HF	2590	DEFF7522DF	3582	DEFF7522TF
	2400	1475	DEFF7524SF	2212	DEFF7524HF	2849	DEFF7524DF	3941	DEFF7524TF
	2600	1609	DEFF7526SF	2413	DEFF7526HF	3108	DEFF7526DF		
	2900	1810	DEFF7529SF			3497	DEFF7529DF		
	3200	2011	DEFF7532SF			3886	DEFF7532DF		

DeepClean Extra - Floor Mounted - Flat Top

Casing Depths: 150mm | 165mm | 200mm | 260mm

Deepclean Extra - Floor Mounted - Flat Top

Casing Height	Casing Length	SF/Type 11 Output Watts	SF/Type 11 Product Code	HF/Type 12 Output Watts	HF/Type 12 Product Code	DF/Type 22 Output Watts	DF/Type 22 Product Code	TF/Type 33 Output Watts	TF/Type 33 Product Code
850	500	233	DEFF8505SF	350	DEFF8505HF	449	DEFF8505DF	620	DEFF8505TF
	600	310	DEFF8506SF	466	DEFF8506HF	598	DEFF8506DF	827	DEFF8506TF
	700	388	DEFF8507SF	583	DEFF8507HF	748	DEFF8507DF	1034	DEFF8507TF
	800	466	DEFF8508SF	699	DEFF8508HF	897	DEFF8508DF	1240	DEFF8508TF
	900	543	DEFF8509SF	816	DEFF8509HF	1047	DEFF8509DF	1447	DEFF8509TF
	1000	621	DEFF8510SF	933	DEFF8510HF	1196	DEFF8510DF	1654	DEFF8510TF
	1100	698	DEFF8511SF	905	DEFF8511HF	1346	DEFF8511DF	1860	DEFF8511TF
	1200	776	DEFF8512SF	1166	DEFF8512HF	1495	DEFF8512DF	2067	DEFF8512TF
	1300	854	DEFF8513SF	1282	DEFF8513HF	1645	DEFF8513DF	2274	DEFF8513TF
	1400	931	DEFF8514SF	1398	DEFF8514HF	1794	DEFF8514DF	2481	DEFF8514TF
	1500	1009	DEFF8515SF	1515	DEFF8515HF	1944	DEFF8515DF		
	1600	1086	DEFF8516SF	1632	DEFF8516HF	2093	DEFF8516DF	2894	DEFF8516TF
	1700	1164	DEFF8517SF	1749	DEFF8517HF	2243	DEFF8517DF		
	1800	1242	DEFF8518SF	1865	DEFF8518HF	2392	DEFF8518DF	3308	DEFF8518TF
	2000	1397	DEFF8520SF	2098	DEFF8520HF	2691	DEFF8520DF	3721	DEFF8520TF
	2200	1552	DEFF8522SF	2331	DEFF8522HF	2990	DEFF8522DF	4134	DEFF8522TF
	2400	1707	DEFF8524SF	2564	DEFF8524HF	3289	DEFF8524DF	4548	DEFF8524TF
	2600	1862	DEFF8526SF	2798	DEFF8526HF	3588	DEFF8526DF		
	2900	2095	DEFF8529SF			4037	DEFF8529DF		
	3200	2328	DEFF8532SF			4486	DEFF8532DF		
950	600	350	DEFF9506SF	527	DEFF9506HF	672	DEFF9506DF	928	DEFF9506TF
	700	437	DEFF9507SF	659	DEFF9507HF	840	DEFF9507DF	1160	DEFF9507TF
	800	525	DEFF9508SF	791	DEFF9508HF	1008	DEFF9508DF	1392	DEFF9508TF
	900	612	DEFF9509SF	922	DEFF9509HF	1176	DEFF9509DF	1623	DEFF9509TF
	1000	700	DEFF9510SF	1054	DEFF9510HF	1344	DEFF9510DF	1855	DEFF9510TF
	1100	787	DEFF9511SF	1186	DEFF9511HF	1512	DEFF9511DF	2087	DEFF9511TF
	1200	874	DEFF9512SF	1318	DEFF9512HF	1680	DEFF9512DF	2319	DEFF9512TF
	1300	962	DEFF9513SF	1449	DEFF9513HF	1848	DEFF9513DF	2551	DEFF9513TF
	1400	1049	DEFF9514SF	1581	DEFF9514HF	2016	DEFF9514DF	2783	DEFF9514TF
	1500	1137	DEFF9515SF	1713	DEFF9515HF	2184	DEFF9515DF		
	1600	1224	DEFF9516SF	1845	DEFF9516HF	2352	DEFF9516DF	3247	DEFF9516TF
	1700	1312	DEFF9517SF			2520	DEFF9517DF		
	1800	1399	DEFF9518SF	2108	DEFF9518HF	2688	DEFF9518DF	3711	DEFF9518TF
	2000	1574	DEFF9520SF	2372	DEFF9520HF	3024	DEFF9520DF		
	2200	1749	DEFF9522SF			3360	DEFF9522DF		
	2400	1924	DEFF9524SF			3696	DEFF9524DF		
	2600	2099	DEFF9526SF			4032	DEFF9526DF		
	2900	2361	DEFF9529SF			4536	DEFF9529DF		
	3200	2623	DEFF9532SF			5040	DEFF9532DF		
1150	600	420	DEFF1106SF	640	DEFF1106HF	802	DEFF1106DF	1103	DEFF1106TF
	700	524	DEFF1107SF	800	DEFF1107HF	1003	DEFF1107DF	1379	DEFF1107TF
	800	629	DEFF1108SF	959	DEFF1108HF	1203	DEFF1108DF	1655	DEFF1108TF
	900	734	DEFF1109SF	1119	DEFF1109HF	1404	DEFF1109DF	1931	DEFF1109TF
	1000	839	DEFF1110SF	1280	DEFF1110HF	1604	DEFF1110DF	2207	DEFF1110TF
	1100	944	DEFF1111SF			1805	DEFF1111DF	2483	DEFF1111TF
	1200	1049	DEFF1112SF			2006	DEFF1112DF	2758	DEFF1112TF
	1300	1154	DEFF1113SF			2206	DEFF1113DF	3034	DEFF1113TF
	1400	1259	DEFF1114SF			2407	DEFF1114DF	3310	DEFF1114TF
	1500	1363	DEFF1115SF			2607	DEFF1115DF	3586	DEFF1115TF
	1600	1468	DEFF1116SF			2808	DEFF1116DF	3862	DEFF1116TF
	1800					3209	DEFF1118DF		
	2000					3610	DEFF1120DF		

All outputs are shown at a ΔT of 50. To calculate other ΔT requirements, please refer to page 103

Extended Lead Times

DeepClean Extra

Floor Mounted - Sloping Top

Summary:

Manufacture:

- Full frame construction
- 1.5mm Zintec steel
- 10mm Radius edges / bullnose corners
- Patented full height front access door with hinge (Pat. No. 2 410 544)
- IP3x test (to BS EN 60529) compliant guard grille available - designed to stop objects >2.5mm diameter being inserted
- Cut-outs programmed into manufacture

Emitter:

- Compact steel panel radiators. EN 442 tested and certified
- Operating pressure 10 bar -(tested to 13 bar/188PSI)

Sizes:

- Single casing length 600mm to 2000mm
- Single casing height 600mm to 1200mm
- Lengths over 2000mm can be achieved but will be modular design so some assembly required on site
- Bespoke solutions available

Valve options available:

- Internal TRV kit 9210-13
- Remote sensing TRV kit 7463-41
- External Back To Wall Anti-Ligature TRV kit 19352-41
- Rotarad rotating valve kit:
  RR04 Single Fin / RR05 Half Fin / RR06 Double Fin (not suitable for Triple Fin radiators)
- Alternative valve patterns and sizes are available upon request

Finish:

- Polyester powder coated RAL 9003 asstandard. Other colour finishes available
- Patented BioCote® anti-microbial agent as standard

Fixings:

- All fixings internal
- 8mm Pinhex Locks

Technical Information & Specifications

Standard delivery

- Standard delivery comprises radiator guard of choice, corresponding Compact emitter (Single Fin, Half Fin, Double Fin and Triple Fin as specified) and the option of a 90degree Herz ½" valve kit (suitable for 15mm copper to copper connection on a two-pipe system)
- An optional Rotarad rotary valve is available (not suitable for Triple Fin radiators)
- Split delivery* to reduce the risk of radiator casings becoming damaged or lost on site, Contour offer split deliveries as standard on all LST radiators. Radiators and valves are delivered first then once the heating system is installed, tested and commissioned, casings are delivered. This virtually eliminates storage problems and the risk of on-site damage.

  *Additional carriage charges will apply for multiple phases

Optional Extras

- Magnelis for wet rooms
- Different guages of material available
- Strengthening struts
- Door cables

Heat Outputs to BS EN 442 Certification.

Outputs based on a mean radiator water temperature of 70°C and a room temperature of 20°C - Delta T 50°C

To achieve Delta T60 increase T50 figures by 20.5%

To calculate alternative Delta T requirements please refer to page 103

To convert BTU to Watts multiply by 0.293. To convert Watts to BTU divide by 0.293

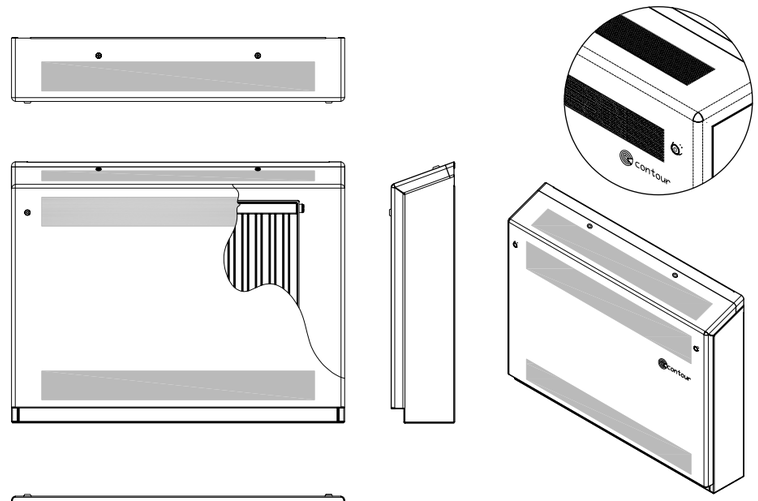

Casing Depth			
Single Fin	Half Fin	Double Fin	Triple Fin
150mm	165mm	200mm	260mm

Please note:

The grille size used in anti-ligature radiator guards can inhibit the convection process. Therefore Contour cannot guarantee that the casing will not exceed a surface temperature of 43°C.

Casing Depths: 150mm, 165mm, 200mm, 260mm

Deepclean Extra - Floor Mounted - Sloping Top

Casing Height	Casing Length	SF/Type 11 Output Watts	SF/Type 11 Product Code	HF/Type 12 Output Watts	HF/Type 12 Product Code	DF/Type 22 Output Watts	DF/Type 22 Product Code	TF/Type 33 Output Watts	TF/Type 33 Product Code
600	600	173	DESF6006SF	262	DESF6006HF	337	DESF6006DF	465	DESF6006TF
	700	216	DESF6007SF	328	DESF6007HF	421	DESF6007DF	581	DESF6007TF
	800	260	DESF6008SF	394	DESF6008HF	505	DESF6008DF	697	DESF6008TF
	900	303	DESF6009SF	459	DESF6009HF	589	DESF6009DF	814	DESF6009TF
	1000	346	DESF6010SF	525	DESF6010HF	673	DESF6010DF	930	DESF6010TF
	1100	390	DESF6011SF	590	DESF6011HF	757	DESF6011DF	1046	DESF6011TF
	1200	433	DESF6012SF	656	DESF6012HF	842	DESF6012DF	1162	DESF6012TF
	1300	476	DESF6013SF	722	DESF6013HF	926	DESF6013DF	1279	DESF6013TF
	1400	519	DESF6014SF	787	DESF6014HF	1010	DESF6014DF	1395	DESF6014TF
	1500	563	DESF6015SF	853	DESF6015HF	1094	DESF6015DF	1511	DESF6015TF
	1600	606	DESF6016SF	918	DESF6016HF	1178	DESF6016DF	1627	DESF6016TF
	1800	692	DESF6018SF	1050	DESF6018HF	1347	DESF6018DF	1860	DESF6018TF
	2000	779	DESF6020SF	1181	DESF6020HF	1515	DESF6020DF	2092	DESF6020TF
	2200	866	DESF6022SF	1312	DESF6022HF	1683	DESF6022DF	2325	DESF6022TF
	2400	952	DESF6024SF			1852	DESF6024DF	2557	DESF6024TF
	2600	1039	DESF6026SF			2020	DESF6026DF	2790	DESF6026TF
	2900	1169	DESF6029SF			2272	DESF6029DF	3138	DESF6029TF
	3200	1298	DESF6032SF			2525	DESF6032DF		
700	600	223	DESF7006SF	334	DESF7006HF	431	DESF7006DF		
	700	279	DESF7007SF	418	DESF7007HF	539	DESF7007DF	745	DESF7007TF
	800	335	DESF7008SF	502	DESF7008HF	647	DESF7008DF	894	DESF7008TF
	900	390	DESF7009SF	585	DESF7009HF	754	DESF7009DF	1043	DESF7009TF
	1000	446	DESF7010SF	669	DESF7010HF	862	DESF7010DF	1192	DESF7010TF
	1100	502	DESF7011SF	752	DESF7011HF	970	DESF7011DF	1341	DESF7011TF
	1200	558	DESF7012SF	836	DESF7012HF	1078	DESF7012DF	1490	DESF7012TF
	1300	613	DESF7013SF	920	DESF7013HF	1185	DESF7013DF	1639	DESF7013TF
	1400	669	DESF7014SF	1003	DESF7014HF	1293	DESF7014DF	1788	DESF7014TF
	1500	725	DESF7015SF	1087	DESF7015HF	1401	DESF7015DF	1938	DESF7015TF
	1600	781	DESF7016SF	1170	DESF7016HF	1509	DESF7016DF	2087	DESF7016TF
	1700	836	DESF7017SF	1254	DESF7017HF	1616	DESF7017DF		
	1800	892	DESF7018SF	1338	DESF7018HF	1724	DESF7018DF	2385	DESF7018TF
	2000	1004	DESF7020SF	1505	DESF7020HF	1940	DESF7020DF	2683	DESF7020TF
	2200	1115	DESF7022SF	1672	DESF7022HF	2155	DESF7022DF	2981	DESF7022TF
	2400	1227	DESF7024SF	1839	DESF7024HF	2371	DESF7024DF	3279	DESF7024TF
	2600	1338	DESF7026SF	2006	DESF7026HF	2586	DESF7026DF		
	2900	1506	DESF7029SF			2910	DESF7029DF		
	3200	1673	DESF7032SF			3233	DESF7032DF		
800	500	201	DESF8005SF			389	DESF8005DF		
	600	268	DESF8006SF	402	DESF8006HF	518	DESF8006DF		
	700	335	DESF8007SF	503	DESF8007HF	648	DESF8007DF	896	DESF8007TF
	800	402	DESF8008SF	603	DESF8008HF	777	DESF8008DF	1075	DESF8008TF
	900	469	DESF8009SF	704	DESF8009HF	907	DESF8009DF	1254	DESF8009TF
	1000	536	DESF8010SF	804	DESF8010HF	1036	DESF8010DF	1433	DESF8010TF
	1100	603	DESF8011SF	905	DESF8011HF	1166	DESF8011DF	1612	DESF8011TF
	1200	670	DESF8012SF	1006	DESF8012HF	1295	DESF8012DF	1791	DESF8012TF
	1300	737	DESF8013SF	1106	DESF8013HF	1425	DESF8013DF	1970	DESF8013TF
	1400	804	DESF8014SF	1207	DESF8014HF	1554	DESF8014DF	2149	DESF8014TF
	1500	872	DESF8015SF	1307	DESF8015HF	1684	DESF8015DF	2329	DESF8015TF
	1600	939	DESF8016SF	1408	DESF8016HF	1813	DESF8016DF	2508	DESF8016TF
	1700	1006	DESF8017SF	1508	DESF8017HF	1943	DESF8017DF		
	1800	1073	DESF8018SF	1609	DESF8018HF	2072	DESF8018DF	2866	DESF8018TF
	2000	1207	DESF8020SF	1810	DESF8020HF	2331	DESF8020DF	3224	DESF8020TF
	2200	1341	DESF8022SF	2011	DESF8022HF	2590	DESF8022DF	3582	DESF8022TF
	2400	1475	DESF8024SF	2212	DESF8024HF	2849	DESF8024DF	3941	DESF8024TF
	2600	1609	DESF8026SF	2413	DESF8026HF	3108	DESF8026DF		
	2900	1810	DESF8029SF			3497	DESF8029DF		
	3200	2011	DESF8032SF			3886	DESF8032DF		

Casing Depths: 150mm, 165mm, 200mm, 260mm

Deepclean Extra - Floor Mounted - Sloping Top

Casing Height	Casing Length	SF/Type 11 Output Watts	SF/Type 11 Product Code	HF/Type 12 Output Watts	HF/Type 12 Product Code	DF/Type 22 Output Watts	DF/Type 22 Product Code	TF/Type 33 Output Watts	TF/Type 33 Product Code
900	500	233	DESF9005SF	350	DESF9005HF	449	DESF9005DF	620	DESF9005TF
	600	310	DESF9006SF	466	DESF9006HF	598	DESF9006DF	827	DESF9006TF
	700	388	DESF9007SF	583	DESF9007HF	748	DESF9007DF	1034	DESF9007TF
	800	466	DESF9008SF	699	DESF9008HF	897	DESF9008DF	1240	DESF9008TF
	900	543	DESF9009SF	816	DESF9009HF	1047	DESF9009DF	1447	DESF9009TF
	1000	621	DESF9010SF	933	DESF9010HF	1196	DESF9010DF	1654	DESF9010TF
	1100	698	DESF9011SF	905	DESF9011HF	1346	DESF9011DF	1860	DESF9011TF
	1200	776	DESF9012SF	1166	DESF9012HF	1495	DESF9012DF	2067	DESF9012TF
	1300	854	DESF9013SF	1282	DESF9013HF	1645	DESF9013DF	2274	DESF9013TF
	1400	931	DESF9014SF	1398	DESF9014HF	1794	DESF9014DF	2481	DESF9014TF
	1500	1009	DESF9015SF	1515	DESF9015HF	1944	DESF9015DF		
	1600	1086	DESF9016SF	1632	DESF9016HF	2093	DESF9016DF	2894	DESF9016TF
	1700	1164	DESF9017SF	1749	DESF9017HF	2243	DESF9017DF		
	1800	1242	DESF9018SF	1865	DESF9018HF	2392	DESF9018DF	3308	DESF9018TF
	2000	1397	DESF9020SF	2098	DESF9020HF	2691	DESF9020DF	3721	DESF9020TF
	2200	1552	DESF9022SF	2331	DESF9022HF	2990	DESF9022DF	4134	DESF9022TF
	2400	1707	DESF9024SF	2564	DESF9024HF	3289	DESF9024DF	4548	DESF9024TF
	2600	1862	DESF9026SF	2798	DESF9026HF	3588	DESF9026DF		
	2900	2095	DESF9029SF			4037	DESF9029DF		
	3200	2328	DESF9032SF			4486	DESF9032DF		
1000	600	350	DESF1006SF	527	DESF1006HF	672	DESF1006DF	928	DESF1006TF
	700	437	DESF1007SF	659	DESF1007HF	840	DESF1007DF	1160	DESF1007TF
	800	525	DESF1008SF	791	DESF1008HF	1008	DESF1008DF	1392	DESF1008TF
	900	612	DESF1009SF	922	DESF1009HF	1176	DESF1009DF	1623	DESF1009TF
	1000	700	DESF1010SF	1054	DESF1010HF	1344	DESF1010DF	1855	DESF1010TF
	1100	787	DESF1011SF	1186	DESF1011HF	1512	DESF1011DF	2087	DESF1011TF
	1200	874	DESF1012SF	1318	DESF1012HF	1680	DESF1012DF	2319	DESF1012TF
	1300	962	DESF1013SF	1449	DESF1013HF	1848	DESF1013DF	2551	DESF1013TF
	1400	1049	DESF1014SF	1581	DESF1014HF	2016	DESF1014DF	2783	DESF1014TF
	1500	1137	DESF1015SF	1713	DESF1015HF	2184	DESF1015DF	3015	DESF1015TF
	1600	1224	DESF1016SF	1845	DESF1016HF	2352	DESF1016DF	3247	DESF1016TF
	1700	1312	DESF1017SF			2520	DESF1017DF		
	1800	1399	DESF1018SF	2108	DESF1018HF	2688	DESF1018DF	3711	DESF1018TF
	2000	1574	DESF1020SF	2372	DESF1020HF	3024	DESF1020DF		
	2200	1749	DESF1022SF			3360	DESF1022DF		
	2400	1924	DESF1024SF			3696	DESF1024DF		
	2600	2099	DESF1026SF			4032	DESF1026DF		
	2900	2361	DESF1029SF			4536	DESF1029DF		
	3200	2623	DESF1032SF			5040	DESF1032DF		
1200	600	420	DESF1206SF	640	DESF1206HF	802	DESF1206DF	1103	DESF1206TF
	700	524	DESF1207SF	800	DESF1207HF	1003	DESF1207DF	1379	DESF1207TF
	800	629	DESF1208SF	959	DESF1208HF	1203	DESF1208DF	1655	DESF1208TF
	900	734	DESF1209SF	1119	DESF1209HF	1404	DESF1209DF	1931	DESF1209TF
	1000	839	DESF1210SF	1280	DESF1210HF	1604	DESF1210DF	2207	DESF1210TF
	1100	944	DESF1211SF			1805	DESF1211DF	2483	DESF1211TF
	1200	1049	DESF1212SF			2006	DESF1212DF	2758	DESF1212TF
	1300	1154	DESF1213SF			2206	DESF1213DF	3034	DESF1213TF
	1400	1259	DESF1214SF			2407	DESF1214DF	3310	DESF1214TF
	1500	1363	DESF1215SF			2607	DESF1215DF	3586	DESF1215TF
	1600	1468	DESF1206SF			2808	DESF1216DF	3862	DESF1216TF
	1600					3209	DESF1218DF		
	1800					3610	DESF1220DF		

All outputs are shown at a ΔT of 50. To calculate other ΔT requirements, please refer to page 103

Extended Lead Times

DeepClean Extra

Wall Mounted - Sloping Top

Summary:

Manufacture:

- 1.5mm Zintec steel
- 10mm Radius edges / bullnose corners
- Patented full height front access door with hinge (Pat. No. 2 410 544)
- IP3x rated 2mm dia holes @ 4mm Centres in a triangular Pitch Formation Punched Grille
- Cut-outs programmed into Manufacture
- Anti-Ligature Base Plate to underside of cover

Emitter:

- Compact steel panel radiators. EN 442 tested and certified
- Operating pressure 10 bar - (tested to 13 bar/188PSI)

Sizes:

- Single casing length 600mm to 2000mm
- Single casing height 600mm to 1200mm
- Lengths over 2000mm can be achieved but will be modular design so some assembly required on site
- Bespoke solutions available

Valve options available:

- Internal TRV kit 9210-13
- Remote sensing TRV kit 7463-41
- External Back To Wall Anti-Ligature TRV kit 19352-41
- Rotarad rotating valve kit:
  RR04 Single Fin / RR05 Half Fin / RR06 Double Fin (not suitable for Triple Fin radiators)
- Alternative valve patterns and sizes are available upon request

Finish:

- Polyester powder coated RAL 9003 as standard. Other colour finishes available
- Patented BioCote® anti-microbial agent as standard

Fixings:

- All fixings internal
- 8mm Pinhex Locks

Technical Information & Specifications

Standard delivery

- Standard delivery comprises radiator guard of choice, corresponding Compact emitter (Single Fin, Half Fin, Double Fin and Triple Fin as specified) and the option of a 90degree Herz ½" valve kit (suitable for 15mm copper to copper connection on a two-pipe system)
- An optional Rotarad rotary valve is available (not suitable for Triple Fin radiators)
- Split delivery* to reduce the risk of radiator casings becoming damaged or lost on site, Contour offer split deliveries as standard on all LST radiators.
  Radiators and valves are delivered first then once the heating system is installed, tested and commissioned, casings are delivered. This virtually eliminates storage problems and the risk of on-site damage.

  *Additional carriage charges will apply for multiple phases

Optional Extras

- Magnelis for wet rooms
- Different guages of material available
- Strengthening struts
- Door cables

Heat Outputs to BS EN 442 Certification.

Outputs based on a mean radiator water temperature of 70°C and a room temperature of 20°C - Delta T 50°C

To achieve Delta T60 increase T50 figures by 20.5%

To calculate alternative Delta T requirements please refer to page 103

To convert BTU to Watts multiply by 0.293. To convert Watts to BTU divide by 0.293

DeepClean Extra - Wall Mounted - Sloping Top

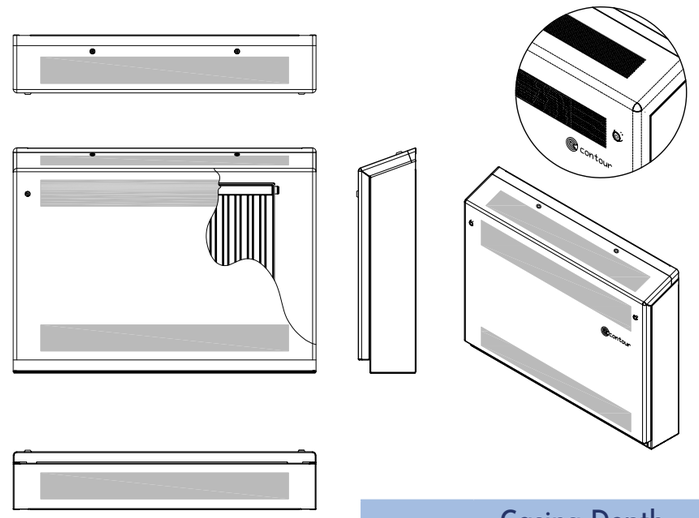

Casing Depth			
Single Fin	Half Fin	Double Fin	Triple Fin
150mm	165mm	200mm	260mm

Please note:

The grille size used in anti-ligature radiator guards can inhibit the convection process. Therefore Contour cannot guarantee that the casing will not exceed a surface temperature of 43°C.

Casing Depths: 150mm 165mm 200mm 260mm

Deepclean Extra - Wall Mounted - Sloping Top

Casing Height	Casing Length	SF/Type 11 Output Watts	SF/Type 11 Product Code	HF/Type 12 Output Watts	HF/Type 12 Product Code	DF/Type 22 Output Watts	DF/Type 22 Product Code	TF/Type 33 Output Watts	TF/Type 33 Product Code
600	600	177	DESW6006SF	269	DESW6006HF	345	DESW606DF	476	DESW6006TF
	700	222	DESW6007SF	336	DESW6007HF	431	DESW607DF	596	DESW6007TF
	800	266	DESW6008SF	403	DESW6008HF	518	DESW608DF	715	DESW6008TF
	900	311	DESW6009SF	471	DESW6009HF	604	DESW609DF	834	DESW6009TF
	1000	355	DESW6010SF	538	DESW6010HF	690	DESW6010DF	953	DESW6010TF
	1100	399	DESW6011SF	605	DESW6011HF	776	DESW6011DF	1072	DESW6011TF
	1200	444	DESW6012SF	672	DESW6012HF	863	DESW6012DF	1191	DESW6012TF
	1300	488	DESW6013SF	740	DESW6013HF	949	DESW6013DF	1311	DESW6013TF
	1400	532	DESW6014SF	807	DESW6014HF	1035	DESW6014DF	1430	DESW6014TF
	1500	577	DESW6015SF	874	DESW6015HF	1122	DESW6015DF	1549	DESW6015TF
	1600	621	DESW6016SF	941	DESW6016HF	1208	DESW6016DF	1668	DESW6016TF
	1800	710	DESW6018SF	1076	DESW6018HF	1380	DESW6018DF	1906	DESW6018TF
	2000	799	DESW6020SF	1210	DESW6020HF	1553	DESW6020DF	2145	DESW6020TF
	2200	887	DESW6022SF	1345	DESW6022HF	1725	DESW6022DF	2383	DESW6022TF
	2400	976	DESW6024SF			1898	DESW6624DF	2621	DESW6024TF
	2600	1065	DESW6026SF			2070	DESW6026DF	2860	DESW6026TF
	2900	1198	DESW6029SF			2329	DESW6029DF	3217	DESW6029TF
	3200	1331	DESW6032SF			2588	DESW6032DF		
700	600	229	DESW7006SF	343	DESW7006HF	442	DESW7006DF		
	700	286	DESW7007SF	428	DESW7007HF	552	DESW7007DF	764	DESW7007TF
	800	343	DESW7008SF	514	DESW7008HF	663	DESW7008DF	917	DESW7008TF
	900	400	DESW7009SF	600	DESW7009HF	773	DESW7009DF	1069	DESW7009TF
	1000	457	DESW7010SF	686	DESW7010HF	884	DESW7010DF	1222	DESW7010TF
	1100	514	DESW7011SF	771	DESW7011HF	994	DESW7011DF	1375	DESW7011TF
	1200	572	DESW7012SF	857	DESW7012HF	1105	DESW7012DF	1528	DESW7012TF
	1300	629	DESW7013SF	943	DESW7013HF	1215	DESW7013DF	1680	DESW7013TF
	1400	686	DESW7014SF	1028	DESW7014HF	1325	DESW7014DF	1833	DESW7014TF
	1500	743	DESW7015SF	1114	DESW7015HF	1436	DESW7015DF	1986	DESW7015TF
	1600	800	DESW7016SF	1200	DESW7016HF	1546	DESW7016DF	2139	DESW7016TF
	1700	857	DESW7017SF	1285	DESW7017HF	1657	DESW7017DF		
	1800	914	DESW7018SF	1371	DESW7018HF	1767	DESW7018DF	2444	DESW7018TF
	2000	1029	DESW7020SF	1542	DESW7020HF	1988	DESW7020DF	2750	DESW7020TF
	2200	1143	DESW7022SF	1714	DESW7022HF	2209	DESW7022DF	3055	DESW7022TF
	2400	1257	DESW7024SF	1885	DESW7024HF	2430	DESW7024DF	3361	DESW7024TF
	2600	1372	DESW7026SF	2057	DESW7026HF	2651	DESW7026DF		
	2900	1543	DESW7029SF			2982	DESW7029DF		
	3200	1715	DESW7032SF			3314	DESW7032DF		
800	500	206	DESW8005SF			398	DESW8005DF		
	600	275	DESW8006SF	412	DESF8006HF	531	DESW8006DF		
	700	344	DESW8007SF	515	DESF8007HF	664	DESW8007DF	918	DESW8007TF
	800	412	DESW8008SF	618	DESF8008HF	797	DESW8008DF	1102	DESW8008TF
	900	481	DESW8009SF	722	DESF8009HF	929	DESW8009DF	1285	DESW8009TF
	1000	550	DESW8010SF	825	DESF8010HF	1062	DESW8010DF	1469	DESW8010TF
	1100	618	DESW8011SF	928	DESF8011HF	1195	DESW8011DF	1652	DESW8011TF
	1200	687	DESW8012SF	1031	DESF8012HF	1328	DESW8012DF	1836	DESW8012TF
	1300	756	DESW8013SF	1134	DESF8013HF	1460	DESW8013DF	2020	DESW8013TF
	1400	825	DESW8014SF	1237	DESF8014HF	1593	DESW8014DF	2203	DESW8014TF
	1500	893	DESW8015SF	1340	DESF8015HF	1726	DESW8015DF	2387	DESW8015TF
	1600	962	DESW8016SF	1443	DESF8016HF	1859	DESW8016DF	2570	DESW8016TF
	1700	1031	DESW8017SF	1546	DESF8017HF	1991	DESW8017DF		
	1800	1099	DESW8018SF	1649	DESF8018HF	2124	DESW8018DF	2938	DESW8018TF
	2000	1237	DESW8020SF	1855	DESF8020HF	2390	DESW8020DF	3305	DESW8020TF
	2200	1374	DESW8022SF	2061	DESF8022HF	2655	DESW8022DF	3672	DESW8022TF
	2400	1512	DESW8024SF	2268	DESF8024HF	2921	DESW8024DF	4039	DESW8024TF
	2600	1649	DESW8026SF	2474	DESF8026HF	3186	DESW8026DF		
	2900	1855	DESW8029SF			3584	DESW8029DF		
	3200	2061	DESW8032SF			3983	DESW8032DF		

Casing Depths: 150mm 165mm 200mm 260mm

Deepclean Extra - Wall Mounted - Sloping Top

Casing Height	Casing Length	SF/Type 11 Output Watts	SF/Type 11 Product Code	HF/Type 12 Output Watts	HF/Type 12 Product Code	DF/Type 22 Output Watts	DF/Type 22 Product Code	TF/Type 33 Output Watts	TF/Type 33 Product Code
900	500	239	DESW9005SF	358	DESW9005HF	460	DESW9005DF	636	DESW9005TF
	600	318	DESW9006SF	478	DESW9006HF	613	DESW9006DF	848	DESW9006TF
	700	398	DESW9007SF	598	DESW9007HF	766	DESW9007DF	1059	DESW9007TF
	800	477	DESW9008SF	717	DESW9008HF	920	DESW9008DF	1271	DESW9008TF
	900	557	DESW9009SF	836	DESW9009HF	1073	DESW9009DF	1483	DESW9009TF
	1000	636	DESW9010SF	956	DESW9010HF	1226	DESW9010DF	1695	DESW9010TF
	1100	716	DESW9011SF	928	DESW9011HF	1379	DESW9011DF	1907	DESW9011TF
	1200	795	DESW9012SF	1195	DESW9012HF	1533	DESW9012DF	2119	DESW9012TF
	1300	875	DESW9013SF	1314	DESW9013HF	1686	DESW9013DF	2331	DESW9013TF
	1400	954	DESW9014SF	1433	DESW9014HF	1839	DESW9014DF	2543	DESW9014TF
	1500	1034	DESW9015SF	1553	DESW9015HF	1992	DESW9015DF		
	1600	1114	DESW9016SF	1673	DESW9016HF	2146	DESW9016DF	2966	DESW9016TF
	1700	1193	DESW9017SF	1793	DESW9017HF	2299	DESW9017DF		
	1800	1273	DESW9018SF	1911	DESW9018HF	2452	DESW9018DF	3390	DESW9018TF
	2000	1432	DESW9020SF	2151	DESW9020HF	2759	DESW9020DF	3814	DESW9020TF
	2200	1591	DESW9022SF	2389	DESW9022HF	3065	DESW9022DF	4238	DESW9022TF
	2400	1750	DESW9024SF	2628	DESW9024HF	3372	DESW9024DF	4662	DESW9024TF
	2600	1909	DESW9026SF	2868	DESW9026HF	3678	DESW9026DF		
	2900	2148	DESW9029SF			4138	DESW9029DF		
	3200	2386	DESW9032SF			4598	DESW9032DF		
1000	600	359	DESW1006SF	540	DESW1006HF	689	DESW1006DF	951	DESW1006TF
	700	448	DESW1007SF	675	DESW1007HF	861	DESW1007DF	1189	DESW1007TF
	800	538	DESW1008SF	810	DESW1008HF	1033	DESW1008DF	1426	DESW1008TF
	900	627	DESW1009SF	945	DESW1009HF	1205	DESW1009DF	1664	DESW1009TF
	1000	717	DESW1010SF	1080	DESW1010HF	1378	DESW1010DF	1902	DESW1010TF
	1100	807	DESW1011SF	1215	DESW1011HF	1550	DESW1011DF	2139	DESW1011TF
	1200	896	DESW1012SF	1351	DESW1012HF	1722	DESW1012DF	2377	DESW1012TF
	1300	986	DESW1013SF	1486	DESW1013HF	1894	DESW1013DF	2615	DESW1013TF
	1400	1076	DESW1014SF	1621	DESW1014HF	2066	DESW1014DF	2853	DESW1014TF
	1500	1165	DESW1015SF	1756	DESW1015HF	2239	DESW1015DF	3090	DESW1015TF
	1600	1255	DESW1016SF	1891	DESW1016HF	2411	DESW1016DF	3328	DESW1016TF
	1700	1345	DESW1017SF			2583	DESW1017DF		
	1800	1434	DESW1018SF	2161	DESW1018HF	2755	DESW1018DF	3803	DESW1018TF
	2000	1613	DESW1020SF	2431	DESW1020HF	3100	DESW1020DF		
	2200	1793	DESW1022SF			3444	DESW1022DF		
	2400	1972	DESW1024SF			3788	DESW1024DF		
	2600	2151	DESW1026SF			4133	DESW1026DF		
	2900	2420	DESW1029SF			4649	DESW1029DF		
	3200	2689	DESW1032SF			5166	DESW1032DF		
1200	600	430	DESW1206SF	656	DESF1206HF	822	DESW1206DF	1131	DESW1206TF
	700	538	DESW1207SF	820	DESF1207HF	1028	DESW1207DF	1414	DESW1207TF
	800	645	DESW1208SF	983	DESF1208HF	1233	DESW1208DF	1696	DESW1208TF
	900	753	DESW1209SF	1147	DESF1209HF	1439	DESW1209DF	1979	DESW1209TF
	1000	860	DESW1210SF	1312	DESF1210HF	1645	DESW1210DF	2262	DESW1210TF
	1100	968	DESW1211SF			1850	DESW1211DF	2545	DESW1211TF
	1200	1075	DESW1212SF			2056	DESW1212DF	2827	DESW1212TF
	1300	1183	DESW1213SF			2261	DESW1213DF	3110	DESW1213TF
	1400	1290	DESW1214SF			2467	DESW1214DF	3393	DESW1214TF
	1500	1398	DESW1215SF			2672	DESW1215DF	3676	DESW1215TF
	1600	1505	DESW1216SF			2878	DESW1216DF	3958	DESW1216TF
	1800					3289	DESW1218DF		
	2000					3700	DESW1220DF		

All outputs are shown at a ΔT of 50. To calculate other ΔT requirements, please refer to page 103

Extended Lead Times

Vertical Anti-ligature Radiators

Whilst vertical radiators offer the space-saving advantages that standard LSTs perhaps do not, the standard grilles do pose a ligature risk. This is particularly important to note when working in mental health, challenging and secure environments where Service Users are vulnerable to self-harming tendencies.

With its 2mm holes at 4mm centres punched directly into the radiator guard, the risk of users securing rope or cord around an anchor point is greatly reduced.

Contour's Vertical Anti-Ligature Radiator comes with BioCote® anti-microbial protection to ensure safety standards for hygiene are met. The presence of the anti-microbial technology offers a 99.5% reduction in bacteria levels in under 2 hours.

Contour have developed two designs of casing for the vertical range.

Sloping Top

The sloping top design allows for a vertical radiators to be installed where there is not enough width to install a conventional radiator. The sloping top design utilises all of the features of the Deepclean Extra design, with additional strengthening struts on the front face of the cover to help cope with demanding environments.

This design is best suited where the pipe work is entering from below the radiator or at low level.

Floor to ceiling

Depending on the environment, pipe work layout or ceiling heights, the floor to ceiling design makes sure that all services are covered up.

The floor to ceiling design allows for the pipework to enter from the ceiling directly into the casing giving the designers and installers more flexibility when dealing with awkward spaces to fit a radiator on to.

The top collar allows for uneven floors and ceilings.

Additional strengthening struts in the front face of the door adds strength into the door to help cope with demanding environments.

DeepClean Extra - Vertical

Sloping Top - Floor to Ceiling

Summary:

Manufacture:

- 1.5mm Zintec steel
- 10mm Radius edges / bullnose corners
- Patented full height front access door with hinge (Pat. No. 2 410 544)
- IP3x rated 2mm dia holes @ 4mm Centres in a triangular Pitch Formation Punched Grille
- Cut-outs programmed into manufacture

Emitter:

- Vertical steel radiators
- 6 Bar Max Operating Pressure
- EN442 Tested and Certified

Sizes

- Single Casing Lengths 400mm - 1100mm
- Single Casing Heights 1900mm - 2300mm
- Bespoke solutions available

Valve options available:

- Internal TRV kit 9210-13
- Remote sensing TRV kit 7463-41
- External Back To Wall Anti-Ligature TRV kit 19352-41
- Alternative valve patterns and sizes are available upon request

Finish:

- Polyester powder coated RAL 9003 as standard. Other colour finishes available
- Patented BioCote® anti-microbial agent as standard

Fixings:

- All fixings internal
- 8mm Pinhex security locks

Technical Information & Specifications

Standard delivery

- Standard delivery comprises radiator guard of choice, corresponding vertical radiators and the option of a 90degree Herz ½" valve kit (suitable for 15mm copper to copper connection on a two-pipe system)
- Split delivery* to reduce the risk of radiator casings becoming damaged or lost on site, Contour offer split deliveries as standard on all LST radiators. Radiators and valves are delivered first then once the heating system is installed, tested and commissioned, casings are delivered. This virtually eliminates storage problems and the risk of on-site damage.

*Additional carriage charges will apply for multiple phases

Optional Extras

- Magnelis for wet rooms
- Different guages of material available
- Strengthening struts
- Door cables

Heat Outputs to BS EN 442 Certification.

Outputs based on a mean radiator water temperature of 70°C and a room temperature of 20°C - Delta T 50°C

To achieve Delta T60 increase T50 figures by 20.5%

To calculate alternative Delta T requirements please refer to page 103

To convert BTU to Watts multiply by 0.293. To convert Watts to BTU divide by 0.293

DeepClean Extra Vertical Radiator

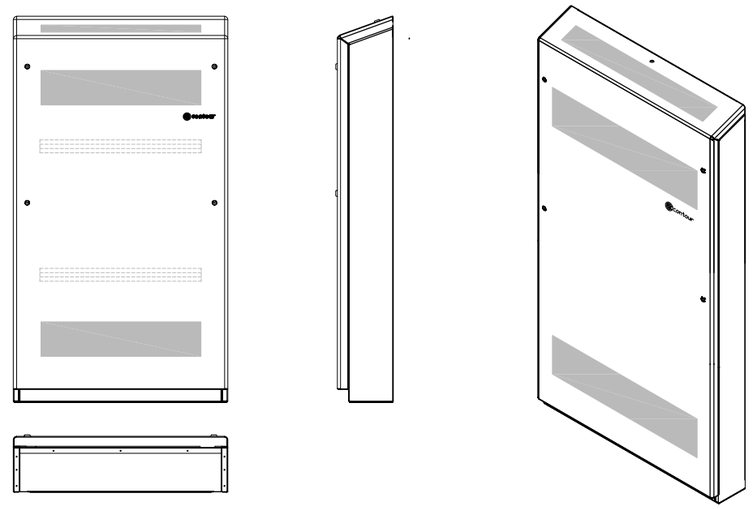

Casing Depth	
Half Fin 165mm	Double Fin 195mm

Deepclean Extra - Vertical

Casing Height	Casing Length	Half Fin Output Watts ΔT 50	Half Fin Contour Code	Double Fin Output Watts ΔT 50	Double Fin Contour Code
1900	400	542	DEVSF1904HF		
	500	677	DEVSF1905HF	893	DEVSF1905DF
	600	870	DEVSF1906HF	1138	DEVSF1906DF
	700	1058	DEVSF1907HF	1382	DEVSF1907DF
	800	1243	DEVSF1908HF	1627	DEVSF1908DF
	900	1423	DEVSF1909HF	1898	DEVSF1909DF
	1100	1830	DEVSF1911HF	2441	DEVSF1911DF
2100	400	609	DEVSF2104HF		
	500	738	DEVSF2105HF	934	DEVSF2105DF
	600	950	DEVSF2106HF	1209	DEVSF2106DF
	700	1156	DEVSF2107HF	1484	DEVSF2107DF
	800	1350	DEVSF2108HF	1758	DEVSF2108DF
	900	1554	DEVSF2109HF	2051	DEVSF2109DF
	1100	1998	DEVSF2111HF	2637	DEVSF2111DF
2300	400	677	DEVSF2304HF		
	500	797	DEVSF2305HF	1007	DEVSF2305DF
	600	1026	DEVSF2306HF	1302	DEVSF2306DF
	700	1249	DEVSF2307HF	1599	DEVSF2307DF
	800	1466	DEVSF2308HF	1896	DEVSF2308DF
	900	1679	DEVSF2309HF	2212	DEVSF2309DF
	1100	2159	DEVSF2311HF	2843	DEVSF2311DF

All outputs are shown at a ΔT of 50. To calculate other ΔT requirements, please refer to page 103

Extended Lead Times

Bespoke Options

No matter what project we take on there is always a challenge to overcome. Although we do offer standard sizes with our LST radiator range, we often find that a one size fits all approach doesn't give the customer and the project the best outcome.

Contour prides itself on being able to offer a bespoke approach to each project making sure that the client is left with a product that is the best it can be and doesn't leave any annoyances that could have been avoided. This could include dust traps, potential ligature points, additional boxing to cover up small sections of pipework.

Options that Contour can cover is;

- Wall to wall covers
- Vertical covers
- Bay window
- Free standing
- Corner fitting covers
- Covers suitable for wet rooms
- Guards suitable to go above window sills
- Cut outs to go around plug sockets, electrical trunking, window sills, pipe boxing, skirting boards, pipe work, TRV heads and more

Corner Fitting

Wall-to-wall

Bespoke OES with TRV Head

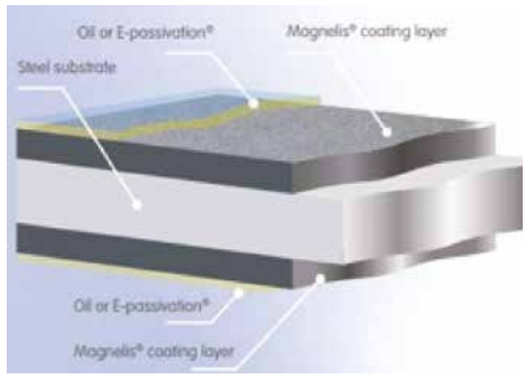

Magnelis Coating

Wall-to-wall

Wall-to-wall

Covora

Designed to ensure safety compliance, the Covora range is the solution for an easy to fit, high-quality Low Surface Temperature radiator, available at a value for money price.

Covora is the ideal LST heating solution for use in:

- GP surgeries and health centres
- Nursing & care homes and daycare centres
- Nurseries, schools, colleges and universities
- Student accommodation
- Leisure centres
- Public libraries
- Offices and reception areas
- Hotel lobbies and public areas
- Restaurants
- Retail spaces
- Cinemas, theatres and entertainment complexes
- Public transport terminals

Designed To Ensure Safer Environments

The Covora range is ideal for building services contractors and heating and plumbing installers, who are working to price-sensitive budgets but require simple, high-quality safety compliant radiators.

With bullnose corners and half bullnose edges, Covora increases in product strength and the risks of an injury in the event of a fall are significantly reduced.

Covora LST radiator casings now come with BioCote® antimicrobial coating as standard on models finished in White RAL 9003 – to help reduce the risk of infection transmission where the maintenance of hygiene is a priority.

Covora

The Contour Covora LST radiator, which is made in the UK, is available in a range of colours, making it ideal for areas such as hotel lobbies, leisure centres and retail spaces, where appearance as well as functionality is important.

BioCote® coating as standard for complete antimicrobial protection to ensure optimal hygiene maintenances

Available in over 140 sizes across single convector, double panel plus and double convector emitter models

The radiator cover is supplied as a one-piece unit complete with pre-fabricated cut-outs for valves, skirting boards and pipework, for ease and speed of installation

Bullnose corners and half bullnose edges on the cover increase the product strength and reduce the risk of injury in the event of a fall against the cover

The radiator cover is manufactured from 1.5mm zintec steel as standard and punched with 5.5mm wide radius grilles. The radius grille design makes it easier to clean, and the narrow grille width prevents small items and/or fingers getting trapped

The radiator cover is polyester powder coated to an average thickness of 60 microns internally and externally, in RAL 9003 White as standard. A wide range of other RAL colours are also available to order

Covora LST

Summary:

Manufacture:

- 1.5mm Zintec steel
- 10mm Radius edges / bullnose corners
- Patented full height front access door with hinge (Pat. No. 2 410 544)
- 5.5mm Punched grille
- Cut-outs programmed into manufacture

Emitter:

- Compact steel panel radiators. EN 442 tested and certified
- Operating pressure 10 bar -(tested to 13 bar/188PSI)

Sizes:

- Casing lengths from 600mm - 2000mm
- Bespoke options available

Valve options available:

- Internal TRV kit 9210-13
- External TRV kit 9231-41
- Remote sensing TRV kit 7463-41
- Alternative valve patterns and sizes are available upon request

Finish:

- Polyester powder coated RAL 9003 as standard. Other colour finishes available
- Patented BioCote® anti-microbial agent as standard

Fixings:

- Joggle brackets
- Side fixing optional

Technical Information & Specifications

Standard delivery

- Standard delivery comprises radiator guard of choice, corresponding Compact emitter (Single Fin, Half Fin, Double Fin and Triple Fin as specified) and the option of a 90degree Herz ½" valve kit (suitable for 15mm copper to copper connection on a two-pipe system)
- Split delivery* option: to reduce the risk of radiator casings becoming damaged or lost on site, Contour offer split deliveries as standard on all LST radiators.
- Radiators and valves are delivered first then once the heating system is installed, tested and commissioned, casings are delivered. This virtually eliminates storage problems and the risk of on-site damage.

  *Additional carriage charges will apply for multiple phases

Optional Extras

- Magnelis for wet rooms
- Different guages of material available
- Strengthening struts

Heat Outputs to BS EN 442 Certification.

Outputs based on a mean radiator water temperature of 70°C and a room temperature of 20°C - Delta T 50°C

To achieve Delta T60 increase T50 figures by 20.5%

To calculate alternative Delta T requirements please refer to page 103

To convert BTU to Watts multiply by 0.293. To convert Watts to BTU divide by 0.293

Casing Depth		
Single Fin 115mm	Half Fin 135mm	Double Fin 175mm

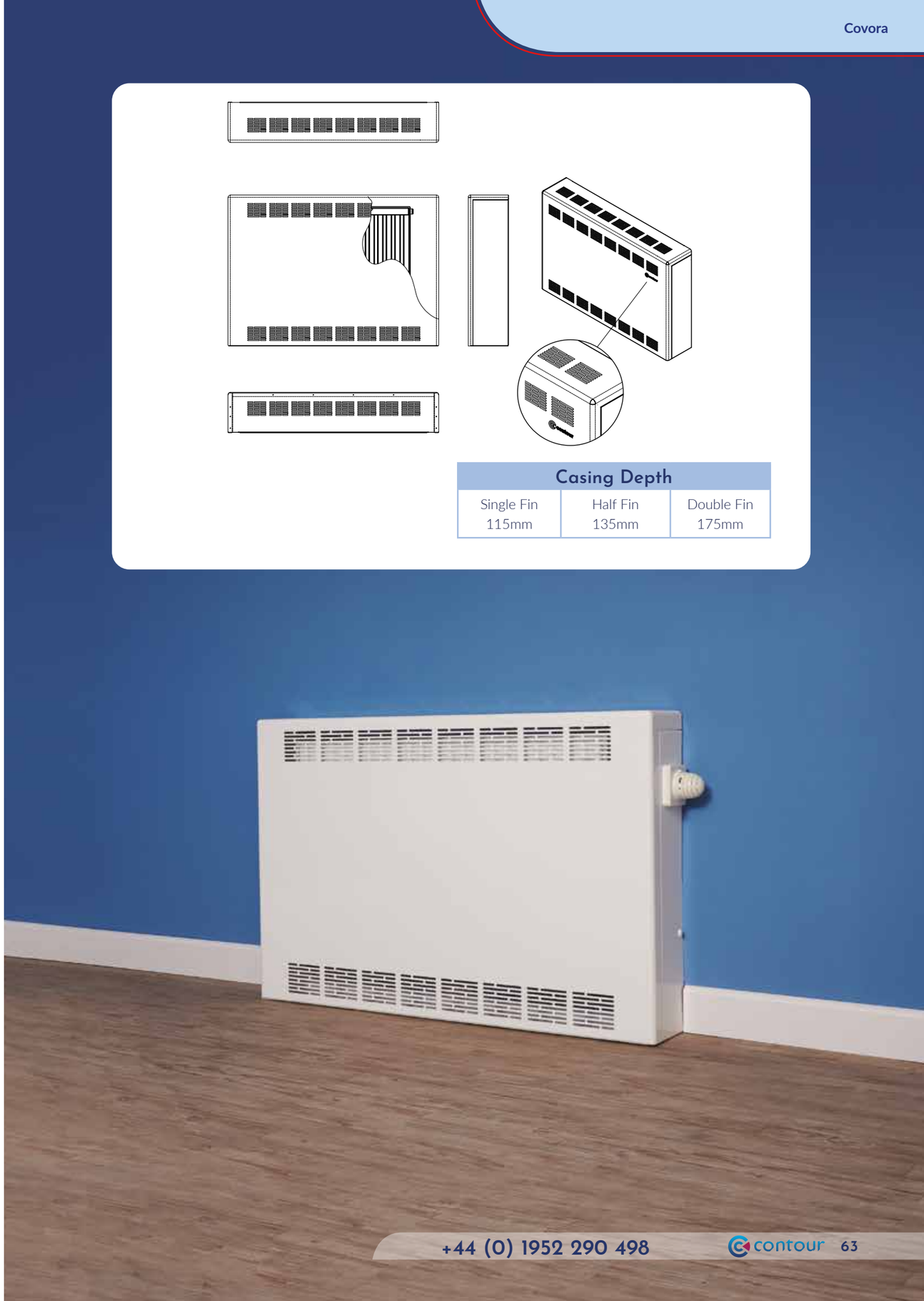

Casing Depths: 115mm 135mm 175mm

Covora- Floor Mounted - Flat Top

Casing Height	Casing Length	SF/Type 11 Output Watts ΔT 50	SF/Type 11 Product Code	HF/Type 12 Output Watts ΔT 50	HF/Type 12 Product Code	DF/Type 22 Output Watts ΔT 50	DF/Type 22 Product Code
550	600	192	C5506SF	292	C5506HF	375	C5506DF
	700	241	C5507SF	365	C5507HF	468	C5507DF
	800	289	C5508SF	438	C5508HF	562	C5508DF
	900	337	C5509SF	511	C5509HF	655	C5509DF
	1000	385	C5510SF	584	C5510HF	749	C5510DF
	1100	433	C5511SF	657	C5511HF	843	C5511DF
	1200	481	C5512SF	730	C5512HF	936	C5512DF
	1300	530	C5513SF	803	C5513HF	1030	C5513DF
	1400	578	C5514SF	876	C5514HF	1124	C5514DF
	1500	626	C5515SF	949	C5515HF	1218	C5515DF
	1600	674	C5516SF	1022	C5516HF	1311	C5516DF
	1800	770	C5518SF	1168	C5518HF	1498	C5518DF
	2000	867	C5520SF	1314	C5520HF	1685	C5520DF
	2200	963	C5522SF	1460	C5522HF	1873	C5522DF
	2400	1059	C5524SF			2060	C5524DF
	2600	1156	C5526SF			2247	C5526DF
	2900	1300	C5529SF			2528	C5529DF
	3200	1444	C5532SF			2809	C5532DF
650	600	248	C6506SF	372	C6506HF	480	C6506DF
	700	310	C6507SF	465	C6507HF	599	C6507DF
	800	372	C6508SF	558	C6508HF	719	C6508DF
	900	434	C6509SF	651	C6509HF	839	C6509DF
	1000	496	C6510SF	744	C6510HF	959	C6510DF
	1100	558	C6511SF	837	C6511HF	1079	C6511DF
	1200	620	C6512SF	930	C6512HF	1199	C6512DF
	1300	682	C6513SF	1023	C6513HF	1319	C6513DF
	1400	744	C6514SF	1116	C6514HF	1439	C6514DF
	1500	806	C6515SF	1209	C6515HF	1558	C6515DF
	1600	868	C6516SF	1302	C6516HF	1678	C6516DF
	1700	930	C6517SF	1395	C6517HF	1798	C6517DF
	1800	993	C6518SF	1488	C6518HF	1918	C6518DF
	2000	1117	C6520SF	1674	C6520HF	2158	C6520DF
	2200	1241	C6522SF	1860	C6522HF	2398	C6522DF
	2400	1365	C6524SF	2046	C6524HF	2637	C6524DF
	2600	1489	C6526SF	2232	C6526HF	2877	C6526DF
	2900	1675	C6529SF			3237	C6529DF
	3200	1861	C6532SF			3596	C6532DF
750	500	224	C7505SF			432	C7505DF
	600	298	C7506SF	447	C7506HF	576	C7506DF
	700	373	C7507SF	559	C7507HF	720	C7507DF
	800	447	C7508SF	671	C7508HF	865	C7508DF
	900	522	C7509SF	783	C7509HF	1009	C7509DF
	1000	597	C7510SF	895	C7510HF	1153	C7510DF
	1100	671	C7511SF	1007	C7511SF	1297	C7511DF
	1200	746	C7512SF	1119	C7512HF	1441	C7512DF
	1300	820	C7513SF	1231	C7513HF	1585	C7513DF
	1400	895	C7514SF	1342	C7514HF	1729	C7514DF
	1500	970	C7515SF	1454	C7515HF	1873	C7515DF
	1600	1044	C7516SF	1566	C7516HF	2017	C7516DF
	1700	1119	C7517SF	1678	C7517HF	2161	C7517DF
	1800	1193	C7518SF	1790	C7518HF	2305	C7518DF
	2000	1342	C7520SF	2014	C7520HF	2594	C7520DF
	2200	1492	C7522SF	2237	C7522HF	2882	C7522DF
	2400	1641	C7524SF	2461	C7524HF	3170	C7524DF
	2600	1790	C7526SF	2685	C7526HF	3458	C7526DF
	2900	2014	C7529SF			3890	C7529DF
	3200	2237	C7532SF			4323	C7532DF

Casing Depths: 115mm 135mm 175mm

Covora - Floor Mounted - Flat Top

Casing Height	Casing Length	SF/Type 11 Output Watts ΔT 50	SF/Type 11 Product Code	HF/Type 12 Output Watts ΔT 50	HF/Type 12 Product Code	DF/Type 22 Output Watts ΔT 50	DF/Type 22 Product Code
850	500	259	C8505SF	389	C8505HF	499	C8505DF
	600	345	C8506SF	519	C8506HF	665	C8506DF
	700	432	C8507SF	649	C8507HF	832	C8507DF
	800	518	C8508SF	778	C8508HF	998	C8508DF
	900	604	C8509SF	908	C8509HF	1164	C8509DF
	1000	691	C8510SF	1038	C8510HF	1331	C8510DF
	1100	777	C8511SF	1007	C8511HF	1497	C8511DF
	1200	863	C8512SF	1297	C8512HF	1663	C8512DF
	1300	950	C8513SF	1427	C8513HF	1830	C8513DF
	1400	1036	C8514SF	1556	C8514HF	1996	C8514DF
	1500	1122	C8515SF	1686	C8515HF	2162	C8515DF
	1600	1209	C8516SF	1816	C8516HF	2329	C8516DF
	1700	1295	C8517SF	1946	C8517HF	2495	C8517DF
	1800	1381	C8518SF	2075	C8518HF	2661	C8518DF
	2000	1554	C8520SF	2334	C8520HF	2994	C8520DF
	2200	1727	C8522SF	2593	C8522HF	3327	C8522DF
	2400	1899	C8524SF	2852	C8524HF	3660	C8524DF
	2600	2072	C8526SF	3112	C8526HF	3992	C8526DF
	2900	2331	C8529SF			4491	C8529DF
	3200	2590	C8532SF			4990	C8532DF
950	600	389	C9506SF	586	C9506HF	748	C9506DF
	700	486	C9507SF	733	C9507HF	935	C9507DF
	800	584	C9508SF	879	C9508HF	1121	C9508DF
	900	681	C9509SF	1026	C9509HF	1308	C9509DF
	1000	778	C9510SF	1173	C9510HF	1495	C9510DF
	1100	875	C9511SF	1319	C9511HF	1682	C9511DF
	1200	973	C9512SF	1466	C9512HF	1869	C9512DF
	1300	1070	C9513SF	1612	C9513HF	2056	C9513DF
	1400	1167	C9514SF	1759	C9514HF	2243	C9514DF
	1500	1265	C9515SF	1906	C9515HF	2430	C9515DF
	1600	1362	C9516SF	2052	C9516HF	2617	C9516DF
	1700	1460	C9517SF			2804	C9517DF
	1800	1556	C9518SF	2345	C9518HF	2990	C9518DF
	2000	1751	C9520SF	2639	C9520HF	3364	C9520DF
	2200	1946	C9522SF			3738	C9522DF
	2400	2140	C9524SF			4112	C9524DF
	2600	2335	C9526SF			4486	C9526DF
	2900	2626	C9529SF			5046	C9529DF
	3200	2918	C9532SF			5607	C9532DF
1150	600	467	C1106SF	712	C1106HF	892	C1106DF
	700	583	C1107SF	890	C1107HF	1116	C1107DF
	800	700	C1108SF	1067	C1108HF	1339	C1108DF
	900	817	C1109SF	1245	C1109HF	1562	C1109DF
	1000	933	C1110SF	1424	C1110HF	1785	C1110DF
	1100	1050	C1111SF			2008	C1111DF
	1200	1167	C1112SF			2231	C1112DF
	1300	1283	C1113SF			2454	C1113DF
	1400	1400	C1114SF			2677	C1114DF
	1500	1517	C1115SF			2901	C1115DF
	1600	1634	C1116SF			3124	C1116DF
	1800					3570	C1118DF
	2000					4016	C1120DF

All outputs are shown at a ΔT of 50. To calculate other ΔT requirements, please refer to page 103

Extended Lead Times

Covora lite

Covora Lite LST radiators ensure safe surface temperatures. These radiators are the ideal and affordable heating solution for classrooms and student accommodation refurbishments.

Safe, robust and cost-effective, Covora Lite is a one-piece construction LST radiator with a much faster turnaround when compared with other Contour products. All end panels are manufactured and kept in stock ready for the front panel to be punched, this forward thinking ensures Covora Lite is delivered much quicker.

The strengthening ridges on the front of the cover allows for a stronger design whilst being more aesthetically pleasing.

Covora Lite also comes with easy to clean, narrow width ventilation grilles. This is to prevent the insertion of pens, pencils and other small items that could potentially damage the radiator itself.

Manufactured from 1.2mm Zintec steel and finished in a RAL 9003 white gloss BioCote protected polyester powder coating, Covora Lite is a strong radiator option that is resilient to impact.

Contour's range of Covora Lite LST radiators are available in a wide range of RAL colours* allowing them to seamlessly blend into the design of your environment.

Covora Lite is available in over 140 sizes across

- · Single Fin models
- · Half Fin models
- · Double Fin models

The installation of Covora Lite is quick and hassle-free: radiator covers are supplied as a one-piece construction. To aid the installation process and construction programme, the radiators and valves can be delivered ahead of the covers to minimise damage before handover.

*Covora Lite comes powder coated in RAL 9003 as standard ensuring a quick turnaround. Additional colours would affect the lead time of the product.

Covora lite

Manufactured in the UK, Covora Lite is a cost-effective LST radiator suited for classrooms and student accommodation. This one-piece construction radiator is finished in a RAL 9003 white powder coating as standard and has a much faster lead time than other Contour products.

Available with BioCote® coating as standard for complete antimicrobial protection to ensure optimal hygiene maintenances

Bullnose corners and half bullnose edges on the cover increase the product strength and reduce the risk of injury in the event of a fall against the cover

The radiator cover is manufactured from 1 & 1.5mm Zintec Steel as standard and punched with 5.5mm wide radius grilles. The radius grille design makes it easier to clean, and the narrow grille width prevents small items and/or fingers getting trapped

Available in over 200 sizes across single convector, double panel plus and double convector emitter models

The Radiator cover is supplied as a one-piece unit complete with pre fabricated cut-outs for external valve head.

Easy to use external TRV head for remote adjustment

The radiator cover is polyester powder coated to an average thickness of 60 microns internally and externally, in RAL 9003 White as standard.

Covora Lite LST

Summary:

Manufacture:

- 1mm door & 1.5mm sides Zintec steel
- 10mm Radius edges / bullnose corners
- 5.5mm Punched grille
- Strengthening ridges to the front panel
- Embossed logo

Emitter:

- Compact steel panel radiators. EN 442 tested and certified
- Operating pressure 10 bar -(tested to 13 bar/188PSI)

Sizes:

- Lengths range from 500mm to 2200mm
- Heights range from 400mm to 950mm

Valve options available:

- Internal TRV kit 9210-13
- External TRV kit 9330-41
- Remote sensing TRV kit 7463-41

Finish:

- Polyester powder coated RAL 9003 as standard. Other colour finishes available
- Patented BioCote® anti-microbial agent as standard

Fixings:

- Joggle brackets
- Side fixing optional

Technical Information & Specifications

Standard delivery

- Standard delivery comprises radiator guard of choice, corresponding Compact emitter (Single Fin, Half Fin, Double Fin and Triple Fin as specified) and a 90degree Herz ½" valve kit (suitable for 15mm copper to copper connection on a two-pipe system)
- Split delivery* to reduce the risk of radiator casings becoming damaged or lost on site, Contour offer split deliveries as standard on all LST radiators.
  Radiators and valves are delivered first then once the heating system is installed, tested and commissioned, casings are delivered. This virtually eliminates storage problems and the risk of on-site damage.

  *Additional carriage charges will apply for multiple phases

Heat Outputs to BS EN 442 Certification.

Outputs based on a mean radiator water temperature of 70°C and a room temperature of 20°C - Delta T 50°C

To achieve Delta T60 increase T50 figures by 20.5%

To calculate alternative Delta T requirements please refer to page 103

To convert BTU to Watts multiply by 0.293. To convert Watts to BTU divide by 0.293

Casing Depth		
Single Fin 100mm	Half Fin 120mm	Double Fin 150mm

Casing Depths: 100mm 120mm 150mm

Covora Lite

Casing Height	Casing Length	SF/Type 11 Output Watts ΔT 50	SF/Type 11 Product Code	HF/Type 12 Output Watts ΔT 50	HF/Type 12 Product Code	DF/Type 22 Output Watts ΔT 50	DF/Type 22 Product Code
500	600	192	CL5006SF	292	CL5006HF	375	CL5006DF
	700	241	CL5007SF	365	CL5007HF	468	CL5007DF
	800	289	CL5008SF	438	CL5008HF	562	CL5008DF
	900	337	CL5009SF	511	CL5009HF	655	CL5009DF
	1000	385	CL5001SF	584	CL5010HF	749	CL5010DF
	1100	433	CL5011SF	657	CL5011HF	843	CL5011DF
	1200	481	CL5012SF	730	CL5012HF	936	CL5012DF
	1300	530	CL5013SF	803	CL5013HF	1030	CL5013DF
	1400	578	CL5014SF	876	CL5014HF	1124	CL5014DF
	1500	626	CL5015SF	949	CL5015HF	1218	CL5015DF
	1600	674	CL5016SF	1022	CL5016HF	1311	CL5016DF
	1800	770	CL5018SF	1168	CL5018HF	1498	CL5018DF
	2000	867	CL5020SF	1314	CL5020HF	1685	CL5020DF
600	600	248	CL6006SF	372	CL6006HF	480	CL6006DF
	700	310	CL6007SF	465	CL6007HF	599	CL6007DF
	800	372	CL6008SF	558	CL6008HF	719	CL6008DF
	900	434	CL6009SF	651	CL6009HF	839	CL6009DF
	1000	496	CL6010SF	744	CL6010HF	959	CL6010DF
	1100	558	CL6011SF	837	CL6011HF	1079	CL6011DF
	1200	620	CL6012SF	930	CL6012HF	1199	CL6012DF
	1300	682	CL6013SF	1023	CL6013HF	1319	CL6013DF
	1400	744	CL6014SF	1116	CL6014HF	1439	CL6014DF
	1500	806	CL6015SF	1209	CL6015HF	1558	CL6015DF
	1600	868	CL6016SF	1302	CL6016HF	1678	CL6016DF
	1700	930	CL6017SF	1395	CL6017HF	1798	CL6017DF
	1800	993	CL6018SF	1488	CL6018HF	1918	CL6018DF
	2000	1117	CL6020SF	1674	CL6020HF	2158	CL6020DF
700	500	224	CL7005SF			432	CL7005DF
	600	298	CL7006SF	447	CL7006HF	576	CL7006DF
	700	373	CL7007SF	559	CL7007HF	720	CL7007DF
	800	447	CL7008SF	671	CL7008HF	865	CL7008DF
	900	522	CL7009SF	783	CL7009HF	1009	CL7009DF
	1000	597	CL7010SF	895	CL7010HF	1153	CL701DF
	1100	671	CL7011SF	1007	CL7011HF	1297	CL7011DF
	1200	746	CL7012SF	1119	CL7012HF	1441	CL7012DF
	1300	820	CL7013SF	1231	CL7013HF	1585	CL7013DF
	1400	895	CL7014SF	1342	CL7014HF	1729	CL7014DF
	1500	970	CL7015SF	1454	CL7015HF	1873	CL7015DF
	1600	1044	CL7016SF	1566	CL7016HF	2017	CL7016DF
	1700	1119	CL7017SF	1678	CL7017HF	2161	CL7017DF
	1800	1193	CL7018SF	1790	CL7018HF	2305	CL7018DF
	2000	1342	CL7020SF	2014	CL7020HF	2594	CL7020DF
	2200	1492	CL7022SF	2237	CL7022HF		

Casing Depths: 100mm 120mm 150mm

Covora Lite

Casing Height	Casing Length	SF/Type 11 Output Watts ΔT 50	SF/Type 11 Product Code	HF/Type 12 Output Watts ΔT 50	HF/Type 12 Product Code	DF/Type 22 Output Watts ΔT 50	DF/Type 22 Product Code
800	500	259	CL8005SF	389	CL8005HF	499	CL8005DF
	600	345	CL8006SF	519	CL8006HF	665	CL8006DF
	700	432	CL8007SF	649	CL8007HF	832	CL8007DF
	800	518	CL8008SF	778	CL8008HF	998	CL8008DF
	900	604	CL8009SF	908	CL8009HF	1164	CL8009DF
	1000	691	CL8010SF	1038	CL8010HF	1331	CL8010DF
	1100	777	CL08011SF	1007	CL8011HF	1497	CL8011DF
	1200	863	CL8012SF	1297	CL8012HF	1663	CL8012DF
	1300	950	CL8013SF	1427	CL8013HF	1830	CL8013DF
	1400	1036	CL8014SF	1556	CL8014HF	1996	CL8014DF
	1500	1122	CL8015SF	1686	CL8015HF	2162	CL8015DF
	1600	1209	CL8016SF	1816	CL8016HF	2329	CL8016DF
	1700	1295	CL8017SF	1946	CL8018HF	2495	CL8017DF
	1800	1381	CL8018SF	2075	CL8018HF	2661	CL8018DF
	2000	1554	CL8020SF	2334	CL8020HF	2994	CL8020DF
900	600	389	CL9006SF	586	CL9006HF	748	CL9006DF
	700	486	CL9007SF	733	CL9007HF	935	CL9007DF
	800	584	CL9008SF	879	CL9008HF	1121	CL9008DF
	900	681	CL9009SF	1026	CL9009HF	1308	CL9009DF
	1000	778	CL9010SF	1173	CL9010HF	1495	CL9010DF
	1100	875	CL9011SF	1319	CL9011HF	1682	CL9011DF
	1200	973	CL9012SF	1466	CL9012HF	1869	CL9012DF
	1300	1070	CL9013SF	1612	CL9013HF	2056	CL9013DF
	1400	1167	CL9014SF	1759	CL9014HF	2243	CL9014DF
	1500	1265	CL9015SF	1906	CL9015HF	2430	CL9015DF
	1600	1362	CL9016SF	2052	CL9016HF	2617	CL9016DF
	1700	1460	CL9017SF			2804	CL9017DF
	1800	1556	CL9018SF	2345	CL9018HF	2990	CL9018DF
	2000	1751	CL9020SF	2639	CL9020HF	3364	CL9020DF

All outputs are shown at a ΔT of 50. To calculate other ΔT requirements, please refer to page 103

Extended Lead Times

Sovereign Radiator Range

Combining sleek design and functional usability, these convectors-with lamella heat exchangers-have been manufactured with style flexibility in mind.

The Sovereign range is particularly suitable in spaces occupied by members of the public. In such environments, a robust and safe design is required to ensure longevity of the product and to protect members of the public against sharp edges. Due to its minimal water usage, users benefit from simple controllability and rapid heating, enhancing thermal comfort conditions.

Contour offers a floor standing, wall mounted, free standing and bench option.

What Makes Sovereign Different?

Sovereign has been manufactured to blend, and in many cases, complement a room's existing décor. With its streamlined, elegant design, this radiator is the ideal heating solution for schools, care homes, sales areas, hotels and residential and sheltered accommodation.

Small & Stylish Grille Design

Whilst providing a more streamlined appearance, the honeycomb grille design also makes it difficult for items to get lost inside the radiator's interior casing.

This is of particular importance in school classrooms where stationary and other small items regularly get pushed inside radiator grilles.

Sovereign Radiators

Combining sleek design and functional usability, these convectors-with lamella heat exchangers-have been manufactured for office and sales areas, car showrooms, hotels and other public buildings.

Energy efficient heating due to low water content.

One-piece construction for robust design, providing longevity.

Honeycomb pencil proof grille stops items being passed through.

Safe corners and edges to provide an extra element of safety in the event of a slip, trip or fall.

Sleek and stylish design that blends seamlessly into your building's decor

Multiple choice of colours available so that you can customise to suit your individual styling requirements.

Sovereign models

Sovereign radiators are available in three models:

1.
Floor mounted

2.
Wall mounted

3.
Free standing

4.
Bench

Sovereign colour options

Contour LST radiators are bespoke and made to order, meaning that no two jobs are the same. Working from a RAL chart, Contour are able to provide almost any colour LST radiator,

All White
(see pic 1 to right)
Cover = RAL 9010 Grille = RAL 9010

White with Black
(see pic 3 to right)
Cover = RAL 9016 Grille = Speckled Black

Dark Blue with Grey
(see main pic to left)
Cover = RAL 5008 Grille = Grey

*Other options available on request

Sovereign

Floor Mounted

Summary:

Manufacture:

- 1.5mm Zintec steel
- 10mm Radius edges / bullnose corners
- Honeycomb Punched grille top and bottom

Emitter:

- Lamella heat exchanger

Valve options available:

- Direct fit External TRV kit
- Direct fit External TRV kit with remote sensor

Finish:

Polyester powder coated in 3 standard designs;

- Option A
  Front face = RAL 9016-White
  Top and sides = RAL 9016 White

- Option B
  Front face = RAL 9016-White
  Top and sides = RAL Dark Slate Grey Textured finish

- Option C
  Front face = RAL 5008 Grey Blue
  Top and sides = RAL 7035 Light Grey

- Bespoke colour choices available

Technical Information & Specifications

Standard delivery

- Standard delivery comprises radiator guard of choice, corresponding Lamella heat exchanger (1F, 2F, 3F and 4F as specified) and a Reverse angle Herz ½" external direct fit valve kit (suitable for 15mm copper to copper connection on a two-pipe system)
- Colour of casing to be specified at time of order.

*Additional carriage charges will apply for multiple phases

Heat Outputs to BS EN 442 Certification.

Outputs based on a mean radiator water temperature of 70°C and a room temperature of 20°C - Delta T 50°C

To achieve Delta T60 increase T50 figures by 20.5%

To calculate alternative Delta T requirements please refer to page 103

To convert BTU to Watts multiply by 0.293. To convert Watts to BTU divide by 0.293

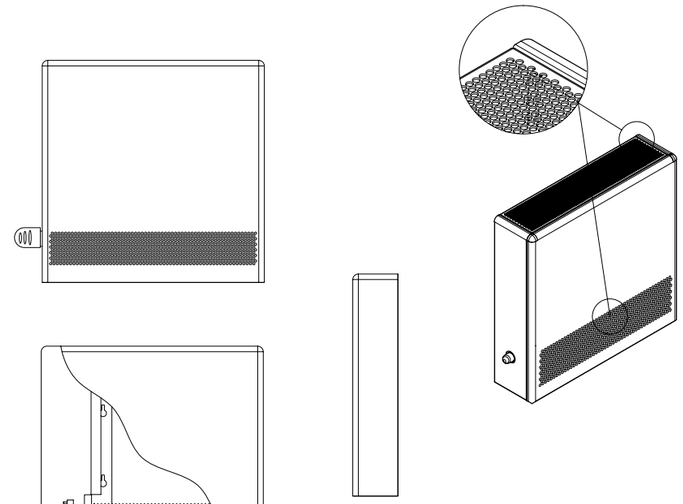

Casing Depth			
Type 1F 82mm	Type 2F 122mm	Type 3F 182mm	Type 4F 242mm

Casing Depths: 82mm 122mm 182mm 242mm

Sovereign - Floor Mounted

Casing Height	Casing Length	1F Output Watts ΔT 50	1F Product Code	2F Output Watts ΔT 50	2F Product Code	3F Output Watts ΔT 50	3F Product Code	4F Output Watts ΔT 50	4F Product Code
265	400			109	SOV26042F	185	SOV26043F	272	SOV26044F
	500			163	SOV26052F	277	SOV26053F	408	SOV26054F
	600			218	SOV26062F	369	SOV26063F	544	SOV26064F
	700			273	SOV26072F	462	SOV26073F	679	SOV26074F
	800			328	SOV26082F	554	SOV26083F	814	SOV26084F
	900			382	SOV26092F	647	SOV26093F	950	SOV26094F
	1000			436	SOV26102F	739	SOV26103F	1086	SOV26104F
	1100			491	SOV26112F	831	SOV26113F	1222	SOV26114F
	1200			545	SOV26122F	924	SOV26123F	1358	SOV26124F
	1400			654	SOV26142F	1108	SOV26143F	1630	SOV26144F
	1600			764	SOV26162F	1293	SOV26163F	1901	SOV26164F
	1800			873	SOV26182F	1477	SOV26183F	2172	SOV26184F
	2000			981	SOV26202F	1662	SOV26203F	2444	SOV26204F
	2200			1090	SOV26222F	1846	SOV26223F	2716	SOV26224F
	2400			1200	SOV26242F	2031	SOV26243F	2988	SOV26244F
	2600			1309	SOV26262F	2216	SOV26263F	3259	SOV26264F
	2800			1418	SOV26282F	2400	SOV26283F	3530	SOV26284F
300	400	75	SOV30041F	118	SOV30042F	200	SOV30043F	286	SOV30044F
	500	112	SOV30051F	177	SOV30052F	299	SOV30053F	429	SOV30054F
	600	150	SOV30061F	236	SOV30062F	399	SOV30063F	572	SOV30064F
	700	187	SOV30071F	295	SOV30072F	499	SOV30073F	715	SOV30074F
	800	224	SOV30081F	353	SOV30082F	598	SOV30083F	858	SOV30084F
	900	261	SOV30091F	413	SOV30092F	697	SOV30093F	1001	SOV30094F
	1000	299	SOV30101F	471	SOV30102F	797	SOV30103F	1144	SOV30104F
	1100	336	SOV30111F	531	SOV30112F	897	SOV30113F	1287	SOV30114F
	1200	373	SOV30121F	590	SOV30122F	997	SOV30123F	1430	SOV30124F
	1400	448	SOV30141F	708	SOV30142F	1196	SOV30143F	1716	SOV30144F
	1600	523	SOV30161F	826	SOV30162F	1396	SOV30163F	2002	SOV30164F
	1800	598	SOV30181F	943	SOV30182F	1594	SOV30183F	2288	SOV30184F
	2000	673	SOV30201F	1061	SOV30202F	1794	SOV30203F	2573	SOV30204F
	2200	747	SOV30221F	1179	SOV30222F	1993	SOV30223F	2860	SOV30224F
	2400	822	SOV30241F	1297	SOV30242F	2193	SOV30243F	3145	SOV30244F
	2600	897	SOV30261F	1415	SOV30262F	2393	SOV30263F	3431	SOV30264F
	2800	971	SOV30281F	1533	SOV30282F	2591	SOV30283F	3717	SOV30284F
400	400	90	SOV40041F	140	SOV40042F	237	SOV40043F	330	SOV40044F
	500	136	SOV40051F	210	SOV40052F	357	SOV40053F	496	SOV40054F
	600	181	SOV40061F	280	SOV40062F	476	SOV40063F	661	SOV40064F
	700	225	SOV40071F	350	SOV40072F	594	SOV40073F	826	SOV40074F
	800	271	SOV40081F	421	SOV40082F	713	SOV40083F	992	SOV40084F
	900	316	SOV40091F	490	SOV40092F	832	SOV40093F	1158	SOV40094F
	1000	361	SOV40101F	561	SOV40102F	950	SOV40103F	1323	SOV40104F
	1100	406	SOV40111F	630	SOV40112F	1070	SOV40113F	1488	SOV40114F
	1200	452	SOV40121F	701	SOV40122F	1189	SOV40123F	1653	SOV40124F
	1400	542	SOV40141F	840	SOV40142F	1426	SOV40143F	1984	SOV40144F
	1600	632	SOV40161F	980	SOV40162F	1664	SOV40163F	2314	SOV40164F
	1800	722	SOV40181F	1121	SOV40182F	1901	SOV40183F	2645	SOV40184F
	2000	813	SOV40201F	1261	SOV40202F	2139	SOV40203F	2976	SOV40204F
	2200	903	SOV40221F	1401	SOV40222F	2377	SOV40223F	3306	SOV40224F
	2400	993	SOV40241F	1541	SOV40242F	2614	SOV40243F	3637	SOV40244F
	2600	1084	SOV40261F	1681	SOV40262F	2852	SOV40263F	3967	SOV40264F
	2800	1174	SOV40281F	1821	SOV40282F	3090	SOV40283F	4297	SOV40284F

Casing Depths: 82mm 122mm 182mm 242mm

Sovereign - Floor Mounted

Casing Height	Casing Length	1F Output Watts ΔT 50	1F Product Code	2F Output Watts ΔT 50	2F Product Code	3F Output Watts ΔT 50	3F Product Code	4F Output Watts ΔT 50	4F Product Code
500	400	109	SOV50041F	160	SOV50042F	273	SOV50043F	382	SOV50044F
	500	162	SOV50051F	240	SOV50052F	410	SOV50053F	573	SOV50054F
	600	216	SOV50061F	320	SOV50062F	547	SOV50063F	763	SOV50064F
	700	269	SOV50071F	400	SOV50072F	684	SOV50073F	954	SOV50074F
	800	323	SOV50081F	480	SOV50082F	820	SOV50083F	1145	SOV50084F
	900	378	SOV50091F	559	SOV50092F	957	SOV50093F	1336	SOV50094F
	1000	431	SOV50101F	639	SOV50102F	1094	SOV50103F	1527	SOV50104F
	1100	485	SOV50111F	719	SOV50112F	1232	SOV50113F	1717	SOV50114F
	1200	539	SOV50121F	766	SOV50122F	1368	SOV50123F	1907	SOV50124F
	1400	647	SOV50141F	959	SOV50142F	1642	SOV50143F	2289	SOV50144F
	1600	754	SOV50161F	1119	SOV50162F	1915	SOV50163F	2671	SOV50164F
	1800	863	SOV50181F	1279	SOV50182F	2189	SOV50183F	3053	SOV50184F
	2000	970	SOV50201F	1438	SOV50202F	2462	SOV50203F	3434	SOV50204F
	2200	1078	SOV50221F	1598	SOV50222F	2736	SOV50223F	3816	SOV50224F
	2400	1186	SOV50241F	1758	SOV50242F	3009	SOV50243F	4198	SOV50244F
	2600	1293	SOV50401F	1918	SOV50262F	3283	SOV50263F	4579	SOV50264F
	2800	1401	SOV50281F	2078	SOV50282F	3556	SOV50283F	4960	SOV50284F
600	400	120	SOV60041F	178	SOV60042F	309	SOV60043F	440	SOV60044F
	500	179	SOV60051F	267	SOV60052F	464	SOV60053F	660	SOV60054F
	600	238	SOV60061F	357	SOV60062F	617	SOV60063F	880	SOV60064F
	700	289	SOV60071F	445	SOV60072F	772	SOV60073F	1100	SOV60074F
	800	357	SOV60081F	535	SOV60082F	927	SOV60083F	1320	SOV60084F
	900	417	SOV60091F	624	SOV60092F	1081	SOV60093F	1540	SOV60094F
	1000	476	SOV60101F	713	SOV60102F	1236	SOV60103F	1760	SOV60104F
	1100	536	SOV60111F	802	SOV60112F	1390	SOV60113F	1980	SOV60114F
	1200	595	SOV60121F	891	SOV60122F	1545	SOV60123F	2200	SOV60124F
	1400	715	SOV60141F	1070	SOV60142F	1853	SOV60143F	2620	SOV60144F
	1600	833	SOV60161F	1248	SOV60162F	2162	SOV60163F	3080	SOV60164F
	1800	953	SOV60181F	1426	SOV60182F	2472	SOV60183F	3520	SOV60184F
	2000	1072	SOV60201F	1605	SOV60202F	2780	SOV60203F	3960	SOV60204F
	2200	1191	SOV60221F	1783	SOV60222F	3089	SOV60223F	4400	SOV60224F
	2400	1310	SOV60241F	1361	SOV60242F	3398	SOV60243F	4840	SOV60244F
	2600	1429	SOV60261F	2139	SOV60262F	3707	SOV60263F	5280	SOV60264F
	2800	1548	SOV60281F	2318	SOV60282F	4015	SOV60283F	5720	SOV60284F
700	400	130	SOV70041F	196	SOV70042F	345	SOV70043F	507	SOV70044F
	500	194	SOV70051F	294	SOV70052F	517	SOV70053F	760	SOV70054F
	600	258	SOV70061F	392	SOV70062F	689	SOV70063F	1014	SOV70064F
	700	323	SOV70071F	490	SOV70072F	862	SOV70073F	1268	SOV70074F
	800	387	SOV70081F	588	SOV70082F	1034	SOV70083F	1521	SOV70084F
	900	452	SOV70091F	686	SOV70092F	1206	SOV70093F	1775	SOV70094F
	1000	516	SOV70101F	784	SOV70102F	1379	SOV70103F	2028	SOV70104F
	1100	581	SOV70111F	882	SOV70112F	1551	SOV70113F	2282	SOV70114F
	1200	645	SOV70121F	980	SOV70122F	1723	SOV70123F	2535	SOV70124F
	1400	773	SOV70141F	1176	SOV70142F	2067	SOV70143F	3043	SOV70144F
	1600	902	SOV70161F	1373	SOV70162F	2412	SOV70163F	3549	SOV70164F
	1800	1031	SOV70181F	1569	SOV70182F	2756	SOV70183F	4057	SOV70184F
	2000	1160	SOV70201F	1765	SOV70202F	3101	SOV70203F	4563	SOV70204F
	2200	1289	SOV70221F	1961	SOV70222F	3446	SOV70223F	5071	SOV70224F
	2400	1418	SOV70241F	2157	SOV70402F	3709	SOV70243F	5578	SOV70244F
	2600	1547	SOV70261F	2353	SOV70262F	4135	SOV70263F	6085	SOV70264F
	2800	1676	SOV70281F	2548	SOV70282F	4480	SOV70283F	6592	SOV70284F

All outputs are shown at a ΔT of 50. To calculate other ΔT requirements, please refer to page 103

Extended Lead Times

Sovereign

Wall Mounted

Summary:

Manufacture:

- 1.5mm Zintec steel
- 10mm Radius edges / bullnose corners
- Honeycomb Punched grille top and bottom

Emitter:

- Lamella heat exchanger

Valve options available:

- Direct fit External TRV kit
- Direct fit External TRV kit with remote sensor

Finish:

Polyester powder coated in 3 standard designs;

- Option A
  Front face = RAL 9016-White
  Top and sides = RAL 9016 White

- Option B
  Front face = RAL 9016-White
  Top and sides = RAL Dark Slate Grey Textured finish

- Option C
  Front face = RAL 5008 Grey Blue
  Top and sides = RAL 7035 Light Grey

- Bespoke colour choices available

Technical Information & Specifications

Standard delivery

- Standard delivery comprises radiator guard of choice, corresponding Lamella heat exchanger (1W, 2W, 3W and 4W as specified) and a Reverse angle Herz ½" external direct fit valve kit (suitable for 15mm copper to copper connection on a two-pipe system)
- Colour of casing to be specified at time of order.

*Additional carriage charges will apply for multiple phases

Heat Outputs to BS EN 442 Certification.

Outputs based on a mean radiator water temperature of 70°C and a room temperature of 20°C - Delta T 50°C

To achieve Delta T60 increase T50 figures by 20.5%

To calculate alternative Delta T requirements please refer to page 103

To convert BTU to Watts multiply by 0.293. To convert Watts to BTU divide by 0.293

Casing Depth			
Type 1W 82mm	Type 2W 122mm	Type 3W 182mm	Type 4W 242mm

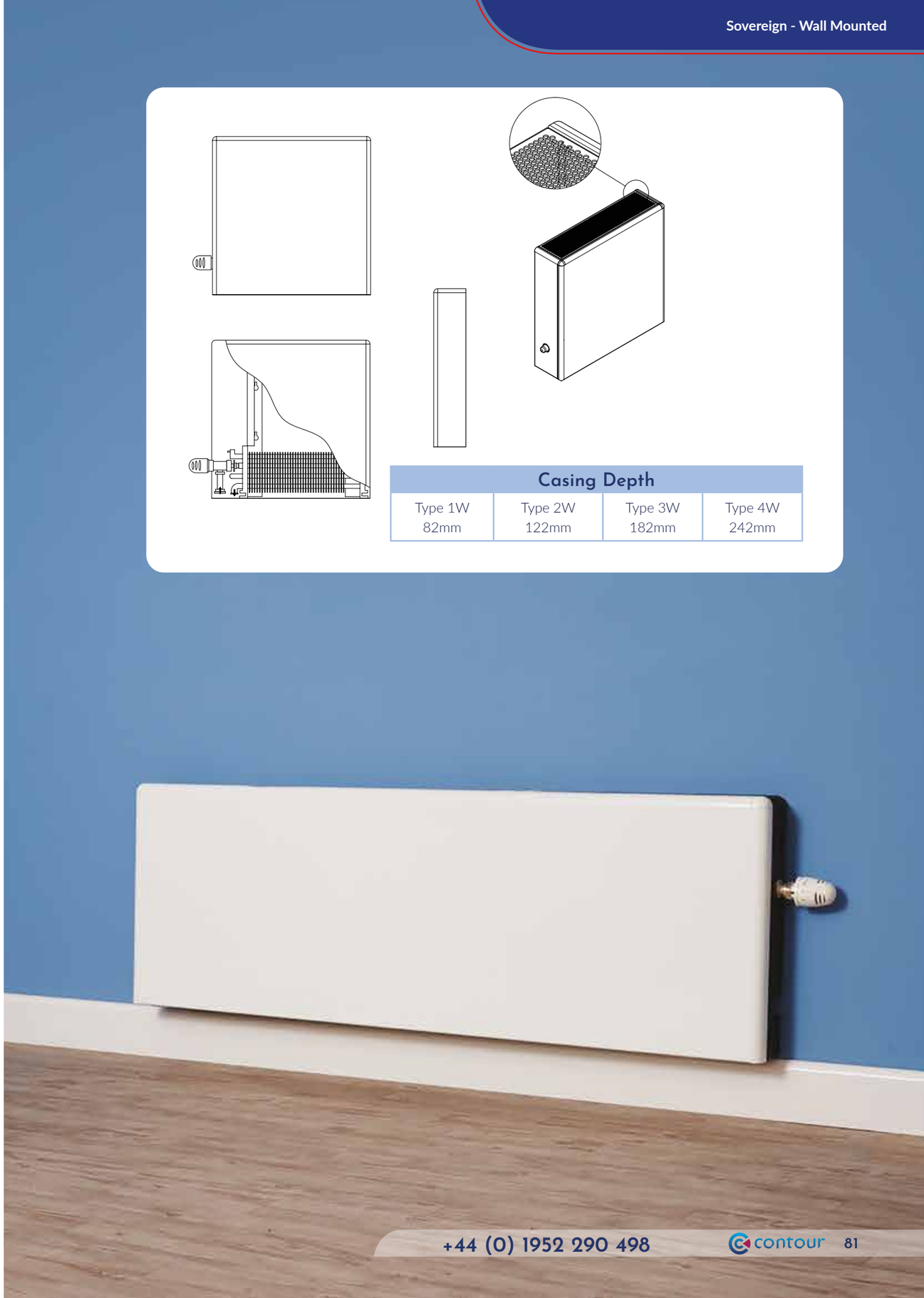

Casing Depths: 82mm 122mm 182mm 242mm

Sovereign - Wall Mounted

Casing Height	Casing Length	1W Output Watts ΔT 50	1W Product Code	2W Output Watts ΔT 50	2W Product Code	3W Output Watts ΔT 50	3W Product Code	4W Output Watts ΔT 50	4W Product Code
165	400			127	SOV16042W	215	SOV16043W	316	SOV16044W
	500			190	SOV16052W	322	SOV16053W	474	SOV16054W
	600			254	SOV16062W	429	SOV16063W	632	SOV16064W
	700			317	SOV16072W	537	SOV16073W	790	SOV16074W
	800			381	SOV16082W	644	SOV16083W	947	SOV16084W
	900			444	SOV16092W	752	SOV16093W	1105	SOV16094W
	1000			507	SOV16102W	859	SOV16103W	1263	SOV16104W
	1100			571	SOV16112W	966	SOV16113W	1421	SOV16114W
	1200			634	SOV16122W	1074	SOV16123W	1579	SOV16124W
	1400			761	SOV16142W	1288	SOV16143W	1895	SOV16144W
	1600			888	SOV16162W	1503	SOV16163W	2211	SOV16164W
	1800			1015	SOV16182W	1718	SOV16183W	2526	SOV16184W
	2000			1141	SOV16202W	1932	SOV16203W	2842	SOV16204W
	2200			1268	SOV16222W	2147	SOV16223W	3158	SOV16224W
	2400			1395	SOV16242W	2362	SOV16243W	3474	SOV16244W
	2600			1522	SOV16262W	2577	SOV16263W	3790	SOV16264W
	2800			1649	SOV16282W	2791	SOV16283W	4105	SOV16284W
200	400	87	SOV20041W	137	SOV20042W	232	SOV20043W	333	SOV20044W
	500	130	SOV20051W	206	SOV20052W	348	SOV20053W	499	SOV20054W
	600	174	SOV20061W	274	SOV30062W	464	SOV20063W	665	SOV20064W
	700	217	SOV20071W	343	SOV20072W	580	SOV20073W	831	SOV20074W
	800	261	SOV20081W	411	SOV20082W	695	SOV20083W	998	SOV20084W
	900	304	SOV20091W	480	SOV20092W	811	SOV20093W	1164	SOV20094W
	1000	348	SOV20101W	548	SOV20102W	927	SOV20103W	1330	SOV20104W
	1100	391	SOV20111W	617	SOV20112W	1043	SOV20113W	1496	SOV20114W
	1200	434	SOV20121W	686	SOV20122W	1159	SOV20123W	1663	SOV20124W
	1400	521	SOV20141W	823	SOV20142W	1391	SOV20143W	1995	SOV20144W
	1600	608	SOV20161W	960	SOV20162W	1623	SOV20163W	2328	SOV20164W
	1800	695	SOV20181W	1097	SOV20182W	1854	SOV20183W	2660	SOV20184W
	2000	782	SOV20201W	1234	SOV20202W	2086	SOV20203W	2992	SOV20204W
	2200	869	SOV20221W	1371	SOV20222W	2318	SOV20223W	3325	SOV20224W
	2400	956	SOV20241W	1508	SOV20242W	2550	SOV20243W	3657	SOV20244W
	2600	1043	SOV20261W	1645	SOV20262W	2782	SOV20263W	3990	SOV20264W
	2800	1129	SOV20281W	1782	SOV20282W	3013	SOV20283W	4322	SOV20284W
300	400	105	SOV30041W	163	SOV30042W	276	SOV30043W	384	SOV30044W
	500	158	SOV30051W	244	SOV30052W	415	SOV30053W	577	SOV30054W
	600	210	SOV30061W	326	SOV30062W	553	SOV30063W	769	SOV30064W
	700	262	SOV30071W	407	SOV30072W	691	SOV30073W	961	SOV30074W
	800	345	SOV30081W	489	SOV30082W	829	SOV30083W	1153	SOV30084W
	900	367	SOV30091W	570	SOV30092W	967	SO030093W	1346	SOV30094W
	1000	420	SOV30101W	652	SOV30102W	1105	SOV30103W	1538	SOV30104W
	1100	472	SOV30111W	733	SOV30112W	1244	SOV30113W	1730	SOV30114W
	1200	525	SOV30121W	815	SOV30122W	1382	SOV30123W	1922	SOV30124W
	1400	630	SOV30141W	977	SOV30142W	1658	SOV30143W	2307	SOV30144W
	1600	735	SOV30161W	1140	SOV30162W	1935	SOV30163W	2691	SOV30164W
	1800	840	SOV30181W	1303	SOV30182W	2211	SOV30183W	3075	SOV30184W
	2000	945	SOV30201W	1466	SOV30202W	2487	SOV30203W	3460	SOV30204W
	2200	1050	SOV30221W	1629	SOV30222W	2764	SOV30223W	3844	SOV30224W
	2400	1155	SOV30241W	1792	SOV30242W	3040	SOV30243W	4229	SOV30244W
	2600	1260	SOV30261W	1955	SOV30262W	3316	SOV30263W	4613	SOV30264W
	2800	1365	SOV30281W	2118	SOV30282W	3593	SOV30283W	4997	SOV30284W

Sovereign - Wall Mounted

Casing Depths: 82mm 122mm 182mm 242mm

Sovereign - Wall Mounted

Casing Height	Casing Length	1W Output Watts ΔT 50	1W Product Code	2W Output Watts ΔT 50	2W Product Code	3W Output Watts ΔT 50	3W Product Code	4W Output Watts ΔT 50	4W Product Code
400	400	125	SOV40041W	186	SOV40042W	318	SOV40043W	444	SOV40044W
	500	188	SOV40051W	279	SOV40052W	477	SOV40053W	666	SOV40054W
	600	251	SOV40061W	372	SOV40062W	636	SOV40063W	887	SOV40064W
	700	313	SOV40071W	465	SOV40072W	795	SOV40073W	1109	SOV40074W
	800	376	SOV40081W	558	SOV40082W	954	SOV40083W	1331	SOV40084W
	900	439	SOV40091W	650	SOV40092W	1113	SOV40093W	1553	SOV40094W
	1000	501	SOV40101W	743	SOV40102W	1272	SOV40103W	1775	SOV40104W
	1100	564	SOV40111W	836	SOV40112W	1432	SOV40113W	1997	SOV40114W
	1200	627	SOV40121W	929	SOV40122W	1591	SOV40123W	2218	SOV40124W
	1400	752	SOV40141W	1115	SOV40142W	1909	SOV40144W	2662	SOV40144W
	1600	877	SOV40161W	1301	SOV40162W	2227	SOV40163W	3106	SOV40164W
	1800	1003	SOV40181W	1487	SOV40182W	2545	SOV40183W	3550	SOV40184W
	2000	1128	SOV40201W	1672	SOV40202W	2863	SOV40203W	3993	SOV40204W
	2200	1253	SOV40221W	1858	SOV40222W	3181	SOV40223W	4437	SOV40224W
	2400	1379	SOV40241W	2044	SOV40242W	3499	SOV40243W	4881	SOV40244W
	2600	1504	SOV40261W	2230	SOV40262W	3817	SOV40263W	5324	SOV40264W
	2800	1629	SOV40281W	2416	SOV40282W	4135	SOV40283W	5768	SOV40284W
500	400	139	SOV50041W	207	SOV50042W	359	SOV50043W	512	SOV50044W
	500	208	SOV50051W	311	SOV50052W	539	SOV50053W	767	SOV50054W
	600	277	SOV50061W	415	SOV50062W	718	SOV50063W	1023	SOV50064W
	700	346	SOV50071W	518	SOV50072W	898	SOV50073W	1279	SOV50074W
	800	415	SOV50081W	622	SOV50208W	1078	SOV50083W	1535	SOV50084W
	900	485	SOV50091W	726	SOV50209W	1257	SOV50093W	1791	SOV50094W
	1000	554	SOV50101W	829	SOV50102W	1437	SOV50103W	2047	SOV50104W
	1100	623	SOV50111W	933	SOV50112W	1616	SOV50113W	2302	SOV50114W
	1200	692	SOV50121W	1036	SOV50122W	1796	SOV50123W	2558	SOV50124W
	1400	831	SOV50141W	1244	SOV50142W	2155	SOV50143W	3070	SOV50144W
	1600	969	SOV50161W	1451	SOV50162W	2514	SOV50163W	3581	SOV50164W
	1800	1108	SOV50181W	1658	SOV50182W	2874	SOV50183W	4093	SOV50184W
	2000	1246	SOV20501W	1866	SOV50202W	3233	SOV50203W	4605	SOV50204W
	2200	1385	SOV50221W	2073	SOV50222W	3592	SOV50223W	5116	SOV50224W
	2400	1523	SOV50241W	2280	SOV50242W	3951	SOV50243W	5628	SOV50244W
	2600	1662	SOV50261W	2487	SOV50262W	4310	SOV50263W	6139	SOV50264W
	2800	1800	SOV50281W	2695	SOV50282W	4669	SOV50283W	6651	SOV50284W
600	400	150	SOV60041W	228	SOV60042W	401	SOV60043W	590	SOV60044W
	500	225	SOV60051W	342	SOV60052W	601	SOV60053W	884	SOV60054W
	600	300	SOV60061W	456	SOV60062W	801	SOV60063W	1179	SOV60064W
	700	375	SOV60071W	570	SOV60072W	1002	SOV60073W	1474	SOV60074W
	800	450	SOV60081W	684	SOV60082W	1202	SOV60083W	1769	SOV60084W
	900	525	SOV60091W	798	SOV60092W	1402	SOV60093W	2064	SOV60094W
	1000	600	SOV60101W	912	SOV60102W	1603	SOV60103W	2358	SOV60104W
	1100	675	SOV60111W	1026	SOV60112W	1803	SOV60113W	2653	SOV60114W
	1200	750	SOV60121W	1140	SOV60122W	2003	SOV60123W	2948	SOV60124W
	1400	899	SOV20141W	1368	SOV60142W	2404	SOV60143W	3538	SOV60144W
	1600	1049	SOV60161W	1596	SOV60162W	2805	SOV60163W	4127	SOV60164W
	1800	1199	SOV60181W	1824	SOV60182W	3205	SOV60183W	4717	SOV60184W
	2000	1349	SOV60201W	2052	SOV60202W	3606	SOV60203W	5306	SOV60204W
	2200	1499	SOV60221W	2280	SOV60222W	4007	SOV60223W	5896	SOV60224W
	2400	1649	SOV60241W	2508	SOV60242W	4407	SOV60243W	6486	SOV60244W
	2600	1799	SOV60261W	2736	SOV60262W	4808	SOV60263W	7075	SOV60264W
	2800	1949	SOV60281W	2963	SOV60282W	5209	SOV60283W	7665	SOV60284W

All outputs are shown at a ΔT of 50. To calculate other ΔT requirements, please refer to page 103

Extended Lead Times

Sovereign

Free Standing

Summary:

Manufacture:

- 1.5mm Zintec steel
- 10mm Radius edges / bullnose corners to both sides
- Honeycomb Punched grille to top of cover
- Pipework enters through feet for safety and aesthetics

Emitter:

- Lamella heat exchanger

Valve options available:

- Direct fit External TRV kit

Finish:

Polyester powder coated in 3 standard designs;

- Option A
  Front face = RAL 9016-White
  Top and sides = RAL 9016 White

- Option B
  Front face = RAL 9016-White
  Top and sides = RAL Dark Slate Grey Textured finish

- Option C
  Front face = RAL 5008 Grey Blue
  Top and sides = RAL 7035 Light Grey

Technical Information & Specifications

Standard delivery

- Standard delivery comprises radiator guard of choice, corresponding Lamella heat exchanger (1FS, 2FS and 3FS as specified) and a Reverse angle Herz ½" external direct fit valve kit (suitable for 15mm copper to copper connection on a two-pipe system)
- Colour of casing to be specified at time of order.

  *Additional carriage charges will apply for multiple phases

Heat Outputs to BS EN 442 Certification.

Outputs based on a mean radiator water temperature of 70°C and a room temperature of 20°C - Delta T 50°C

To achieve Delta T60 increase T50 figures by 20.5%

To calculate alternative Delta T requirements please refer to page 103

To convert BTU to Watts multiply by 0.293. To convert Watts to BTU divide by 0.293

Casing Depth		
Type 1FS 138mm	Type 2FS 198mm	Type 3FS 258mm

Casing Depths: 138mm 198mm 258mm

Sovereign - Free Standing

Casing Height	Casing Length	Type 1FS Output Watts ΔT 50	Type 1FS Product Code	Type 2FS Output Watts ΔT 50	Type 2FS Product Code	Type 3FS Output Watts ΔT 50	Type 3FS Product Code
190	400	113	SOV19041FS	191	SOV19042FS	266	SOV19043FS
	500	161	SOV19051FS	271	SOV19052FS	377	SOV19053FS
	600	209	SOV19061FS	352	SOV19062FS	489	SOV19063FS
	700	256	SOV19071FS	432	SOV19072FS	601	SOV19073FS
	800	304	SOV19081FS	513	SOV19082FS	713	SOV19083FS
	900	352	SOV19091FS	593	SOV19092FS	825	SOV19093FS
	1000	400	SOV19101FS	673	SOV19102FS	937	SOV19103FS
	1100	447	SOV19111FS	754	SOV19112FS	1048	SOV19113FS
	1200	495	SOV19121FS	834	SOV19122FS	1160	SOV19123FS
	1400	590	SOV19141FS	995	SOV19142FS	1384	SOV19143FS
	1600	702	SOV19161FS	1183	SOV19162FS	1645	SOV19163FS
	1800	797	SOV19181FS	1344	SOV19182FS	1869	SOV19183FS
	2000	893	SOV19201FS	1504	SOV19202FS	2093	SOV19203FS
	2200	988	SOV19221FS	1665	SOV19222FS	2316	SOV19223FS
	2400	1083	SOV19241FS	1826	SOV19242FS	2540	SOV19243FS
	2600	1179	SOV19261FS	1987	SOV19262FS	2764	SOV19263FS
	2800	1274	SOV19281FS	2148	SOV19282FS	2987	SOV19283FS
250	400	179	SOV25041FS	293	SOV25042FS	414	SOV25043FS
	500	235	SOV25051FS	384	SOV25052FS	543	SOV25053FS
	600	314	SOV25061FS	511	SOV25062FS	723	SOV25063FS
	700	381	SOV25071FS	621	SOV25072FS	878	SOV25073FS
	800	448	SOV25081FS	730	SOV25082FS	1033	SOV25083FS
	900	515	SOV25091FS	840	SOV25092FS	1188	SOV25093FS
	1000	582	SOV25101FS	949	SOV25102FS	1342	SOV25103FS
	1100	649	SOV25111FS	1058	SOV25112FS	1497	SOV25113FS
	1200	716	SOV25121FS	1168	SOV25122FS	1652	SOV25123FS
	1400	850	SOV25141FS	1386	SOV25142FS	1961	SOV25143FS
	1600	1007	SOV25161FS	1642	SOV25162FS	2323	SOV25163FS
	1800	1141	SOV25181FS	1861	SOV25182FS	2632	SOV25183FS
	2000	1275	SOV25201FS	2080	SOV25202FS	2942	SOV25203FS
	2200	1409	SOV25221FS	2298	SOV25222FS	3251	SOV25223FS
	2400	1544	SOV25241FS	2517	SOV25242FS	3561	SOV25243FS
	2600	1678	SOV25261FS	2736	SOV25262FS	3870	SOV25263FS
	2800	1812	SOV25281FS	2955	SOV25282FS	4180	SOV25283FS
300	400	196	SOV30041FS	320	SOV30042FS	448	SOV30043FS
	500	256	SOV30051FS	419	SOV30052FS	587	SOV30053FS
	600	342	SOV30061FS	559	SOV30062FS	783	SOV30063FS
	700	415	SOV30071FS	679	SOV30072FS	951	SOV30073FS
	800	488	SOV30081FS	799	SOV30082FS	1118	SOV30083FS
	900	561	SOV30091FS	918	SOV30092FS	1286	SOV30093FS
	1000	635	SOV30101FS	1038	SOV30102FS	1453	SOV30103FS
	1100	708	SOV30111FS	1157	SOV30112FS	1621	SOV30113FS
	1200	781	SOV30121FS	1277	SOV30122FS	1788	SOV30123FS
	1400	927	SOV30141FS	1516	SOV30142FS	2124	SOV30143FS
	1600	1098	SOV30161FS	1796	SOV30162FS	2515	SOV30163FS
	1800	1244	SOV30181FS	2035	SOV30182FS	2850	SOV30183FS
	2000	1391	SOV30201FS	2274	SOV30202FS	3185	SOV30203FS
	2200	1537	SOV30221FS	2514	SOV30222FS	3520	SOV30223FS
	2400	1683	SOV30241FS	2753	SOV30242FS	3855	SOV30243FS
	2600	1829	SOV30261FS	2992	SOV30262FS	4190	SOV30263FS
	2800	1976	SOV30281FS	3231	SOV30282FS	4526	SOV30283FS
400	400	221	SOV40041FS	363	SOV40042FS	501	SOV40043FS
	500	290	SOV40051FS	476	SOV40052FS	657	SOV40053FS
	600	386	SOV40061FS	634	SOV40062FS	876	SOV40063FS
	700	469	SOV40071FS	770	SOV40072FS	1063	SOV40073FS
	800	552	SOV40081FS	906	SOV40082FS	1251	SOV40083FS
	900	634	SOV40091FS	1042	SOV40092FS	1438	SOV40093FS
	1000	717	SOV40101FS	1177	SOV40102FS	1626	SOV40103FS
	1100	799	SOV40111FS	1313	SOV40112FS	1813	SOV40113FS
	1200	882	SOV40121FS	1449	SOV40122FS	2000	SOV40123FS

Casing Depths: 138mm 198mm 258mm

Sovereign - Free Standing

Casing Height	Casing Length	Type 1FS Output Watts ΔT 50	Type 1FS Product Code	Type 2FS Output Watts ΔT 50	Type 2FS Product Code	Type 3FS Output Watts ΔT 50	Type 3FS Product Code
400	1400	1047	SOV40141FS	1720	SOV40142FS	2375	SOV40143FS
	1600	1240	SOV40161FS	2037	SOV40162FS	2813	SOV40163FS
	1800	1406	SOV40181FS	2309	SOV40182FS	3188	SOV40183FS
	2000	1571	SOV40201FS	2580	SOV40202FS	3563	SOV40203FS
	2200	1736	SOV40221FS	2852	SOV40222FS	3937	SOV40223FS
	2400	1901	SOV40241FS	3123	SOV40242FS	4312	SOV40243FS
	2600	2067	SOV40261FS	3394	SOV40262FS	4687	SOV40263FS
	2800	2232	SOV40281FS	3666	SOV40282FS	5062	SOV40283FS
500	400	241	SOV50041FS	397	SOV50042FS	543	SOV50043FS
	500	316	SOV50051FS	520	SOV50052FS	711	SOV50053FS
	600	421	SOV50061FS	694	SOV50062FS	949	SOV50063FS
	700	511	SOV50071FS	842	SOV50072FS	1151	SOV50073FS
	800	601	SOV50081FS	991	SOV50082FS	1354	SOV50083FS
	900	692	SOV50091FS	1139	SOV50092FS	1557	SOV50093FS
	1000	782	SOV50101FS	1287	SOV50102FS	1760	SOV50103FS
	1100	872	SOV50111FS	1436	SOV50112FS	1963	SOV50113FS
	1200	962	SOV50121FS	1584	SOV50122FS	2166	SOV50123FS
	1400	1142	SOV50141FS	1881	SOV50142FS	2572	SOV50143FS
	1600	1353	SOV50161FS	2228	SOV50162FS	3046	SOV50163FS
	1800	1533	SOV50181FS	2525	SOV50182FS	3452	SOV50183FS
	2000	1713	SOV50201FS	2822	SOV50202FS	3857	SOV50203FS
	2200	1893	SOV50221FS	3118	SOV50222FS	4263	SOV50223FS
	2400	2073	SOV50241FS	3415	SOV50242FS	4669	SOV50243FS
	2600	2254	SOV50261FS	3712	SOV50262FS	5075	SOV50263FS
	2800	2434	SOV50281FS	4009	SOV50282FS	5480	SOV50283FS
600	400	258	SOV60041FS	426	SOV60042FS	577	SOV60043FS
	500	338	SOV60051FS	558	SOV60052FS	757	SOV60053FS
	600	450	SOV60061FS	744	SOV60062FS	1009	SOV60063FS
	700	547	SOV60071FS	903	SOV60072FS	1225	SOV60073FS
	800	643	SOV60081FS	1062	SOV60082FS	1440	SOV60083FS
	900	740	SOV60091FS	1221	SOV60092FS	1656	SOV60093FS
	1000	836	SOV60101FS	1380	SOV60102FS	1872	SOV60103FS
	1100	932	SOV60111FS	1539	SOV60112FS	2088	SOV60113FS
	1200	1029	SOV60121FS	1698	SOV60122FS	2303	SOV60123FS
	1400	1221	SOV60141FS	2016	SOV60142FS	2735	SOV60143FS
	1600	1446	SOV60161FS	2388	SOV60162FS	3239	SOV60163FS
	1800	1639	SOV60181FS	2706	SOV60182FS	3671	SOV60183FS
	2000	1832	SOV60201FS	3024	SOV60202FS	4103	SOV60203FS
	2200	2025	SOV60221FS	3343	SOV60222FS	4534	SOV60223FS
	2400	2217	SOV60241FS	3661	SOV60242FS	4966	SOV60243FS
	2600	2410	SOV60261FS	3979	SOV60262FS	5397	SOV60263FS
	2800	2603	SOV60281FS	4297	SOV60282FS	5829	SOV60283FS
700	400	272	SOV70041FS	450	SOV70042FS	607	SOV70043FS
	500	357	SOV70051FS	590	SOV70052FS	796	SOV70053FS
	600	476	SOV70061FS	787	SOV70062FS	1061	SOV70063FS
	700	578	SOV70071FS	955	SOV70072FS	1288	SOV70073FS
	800	679	SOV70081FS	1124	SOV70082FS	1515	SOV70083FS
	900	781	SOV70091FS	1292	SOV70092FS	1742	SOV70093FS
	1000	883	SOV70101FS	1461	SOV70102FS	1969	SOV70103FS
	1100	985	SOV70111FS	1629	SOV70112FS	2196	SOV70113FS
	1200	1087	SOV70121FS	1797	SOV70122FS	2422	SOV70123FS
	1400	1290	SOV70141FS	2134	SOV70142FS	2876	SOV70143FS
	1600	1528	SOV70161FS	2527	SOV70162FS	3407	SOV70163FS
	1800	1732	SOV70181FS	2864	SOV70182FS	3861	SOV70183FS
	2000	1935	SOV70201FS	3201	SOV70202FS	4314	SOV70203FS
	2200	2139	SOV70221FS	3538	SOV70222FS	4768	SOV70223FS
	2400	2342	SOV70241FS	3874	SOV70242FS	5222	SOV70243FS
	2600	2546	SOV70261FS	4211	SOV70262FS	5676	SOV70263FS
	2800	2749	SOV70281FS	4548	SOV70282FS	6130	SOV70283FS

All outputs are shown at a ΔT of 50. To calculate other ΔT requirements, please refer to page 103

Extended Lead Times

Sovereign

Bench Radiator

Summary:

Manufacture:

- 1.5mm Zintec steel
- 10mm Radius edges / bullnose corners
- Honeycomb Punched grille to top of cover
- Hard wood seat – Beech
- Slimline or pipe guard feet available

Emitter:

- Lamella heat exchanger

Valve options available:

- Direct fit External TRV kit

Finish:

Polyester powder coated RAL 9016-White

Technical Information & Specifications

Standard delivery

- Standard delivery comprises radiator guard of choice, corresponding Lamella heat exchanger (1B, 2B and 3B as specified) and a Reverse angle Herz ½" external direct fit valve kit (suitable for 15mm copper to copper connection on a two-pipe system)
- Hard wood seat with brackets and fixings

*Additional carriage charges will apply for multiple phases

Heat Outputs to BS EN 442 Certification.
Outputs based on a mean radiator water temperature of 70°C and a room temperature of 20°C - Delta T 50°C
To achieve Delta T60 increase T50 figures by 20.5%

To calculate alternative Delta T requirements please refer to page 103

To convert BTU to Watts multiply by 0.293. To convert Watts to BTU divide by 0.293

Casing Depth		
Type 11 190mm	Type 21 250mm	Type 22 310mm

Casing Depths: 190mm 250mm 310mm

Sovereign - Bench Radiator

Casing Height	Casing Length With Bench	Type 1B Output Watts ΔT 50	Type 1B Product Code	Type 2B Output Watts ΔT 50	Type 2B Product Code	Type 3B Output Watts ΔT 50	Type 3B Product Code
290	500	113	SOV29051B	191	SOV29052B	266	SOV29053B
	600	161	SOV29061B	271	SOV29062B	377	SOV29063B
	700	209	SOV29071B	352	SOV29072B	489	SOV29073B
	800	256	SOV29081B	432	SOV29082B	601	SOV29083B
	900	304	SOV29091B	513	SOV29092B	713	SOV29093B
	1000	352	SOV29101B	593	SOV29102B	825	SOV29103B
	1100	400	SOV29111B	673	SOV29112B	937	SOV29113B
	1200	447	SOV29121B	754	SOV29122B	1048	SOV29123B
	1300	495	SOV29131B	834	SOV29132B	1160	SOV29133B
	1500	590	SOV29151B	995	SOV29152B	1384	SOV29153B
	1700	702	SOV29171B	1183	SOV29172B	1645	SOV29173B
	1900	797	SOV29191B	1344	SOV29192B	1869	SOV29193B
	2100	893	SOV29211B	1504	SOV29212B	2093	SOV29213B
	2300	988	SOV29231B	1665	SOV29232B	2316	SOV29233B
	2500	1083	SOV29251B	1826	SOV29252B	2540	SOV29253B
	2700	1179	SOV29271B	1987	SOV29272B	2764	SOV29273B
	2900	1274	SOV29291B	2148	SOV29292B	2987	SOV29293B
350	500	179	SOV35051B	293	SOV35052B	414	SOV35053B
	600	235	SOV35061B	384	SOV35062B	543	SOV35063B
	700	314	SOV35071B	511	SOV35072B	723	SOV35073B
	800	381	SOV35081B	621	SOV35082B	878	SOV35083B
	900	448	SOV35091B	730	SOV35092B	1033	SOV35093B
	1000	515	SOV35101B	840	SOV35102B	1188	SOV35103B
	1100	582	SOV35111B	949	SOV35112B	1342	SOV35113B
	1200	649	SOV35121B	1058	SOV35122B	1497	SOV35123B
	1300	716	SOV35131B	1168	SOV35132B	1652	SOV35133B
	1500	850	SOV35151B	1386	SOV35152B	1961	SOV35153B
	1700	1007	SOV35171B	1642	SOV35172B	2323	SOV35173B
	1900	1141	SOV35191B	1861	SOV35192B	2632	SOV35193B
	2100	1275	SOV35211B	2080	SOV35212B	2942	SOV35213B
	2300	1409	SOV35231B	2298	SOV35232B	3251	SOV35233B
	2500	1544	SOV35251B	2517	SOV35252B	3561	SOV35253B
	2700	1678	SOV35271B	2736	SOV35272B	3870	SOV35273B
	2900	1812	SOV35291B	2955	SOV35292B	4180	SOV35293B
400	500	196	SOV40051B	320	SOV40052B	448	SOV40053B
	600	256	SOV40061B	419	SOV40062B	587	SOV40063B
	700	342	SOV40071B	559	SOV40072B	783	SOV40073B
	800	415	SOV40081B	679	SOV40082B	951	SOV40083B
	900	488	SOV40091B	799	SOV40092B	1118	SOV40093B
	1000	561	SOV40101B	918	SOV40102B	1286	SOV40103B
	1100	635	SOV40111B	1038	SOV40112B	1453	SOV40113B
	1200	708	SOV40121B	1157	SOV40122B	1621	SOV40123B
	1300	781	SOV40131B	1277	SOV40132B	1788	SOV40133B
	1500	927	SOV40151B	1516	SOV40152B	2124	SOV40153B
	1700	1098	SOV40171B	1796	SOV40172B	2515	SOV40173B
	1900	1244	SOV40191B	2035	SOV40192B	2850	SOV40193B
	2100	1391	SOV40211B	2274	SOV40212B	3185	SOV40213B
	2300	1537	SOV40231B	2514	SOV40232B	3520	SOV40233B
	2500	1683	SOV40251B	2753	SOV40252B	3855	SOV40253B
	2700	1829	SOV40271B	2992	SOV40272B	4190	SOV40273B
	2900	1976	SOV40291B	3231	SOV40292B	4526	SOV40293B

Casing Depths: 190mm 250mm 310mm

Sovereign - Bench Radiator

Casing Height	Casing Length With Bench	Type 1B Output Watts ΔT 50	Type 1B Product Code	Type 2B Output Watts ΔT 50	Type 2B Product Code	Type 3B Output Watts ΔT 50	Type 3B Product Code
500	500	221	SOV50051B	363	SOV50052B	501	SOV50053B
	600	290	SOV50061B	476	SOV50062B	657	SOV50063B
	700	386	SOV50071B	634	SOV50072B	876	SOV50073B
	800	469	SOV50081B	770	SOV50082B	1063	SOV50083B
	900	552	SOV50091B	906	SOV50092B	1251	SOV50093B
	1000	634	SOV50101B	1042	SOV50102B	1438	SOV50103B
	1100	717	SOV50111B	1177	SOV50112B	1626	SOV50113B
	1200	799	SOV50121B	1313	SOV50122B	1813	SOV50123B
	1300	882	SOV50131B	1449	SOV50132B	2000	SOV50133B
	1500	1047	SOV50151B	1720	SOV50152B	2375	SOV50153B
	1700	1240	SOV50171B	2037	SOV50172B	2813	SOV50173B
	1900	1406	SOV50191B	2309	SOV50192B	3188	SOV50193B
	2100	1571	SOV50211B	2580	SOV50212B	3563	SOV50213B
	2300	1736	SOV50231B	2852	SOV50232B	3937	SOV50233B
	2500	1901	SOV50251B	3123	SOV50252B	4312	SOV50253B
	2700	2067	SOV50271B	3394	SOV50272B	4687	SOV50273B
	2900	2232	SOV50291B	3666	SOV50292B	5062	SOV50293B

All outputs are shown at a ΔT of 50. To calculate other ΔT requirements, please refer to page 103

Extended Lead Times

HVAC-Air Con Unit Anti-Ligature Covers

Contour's AC covers offer a robust, hygienic, and practical solution that delivers long-term performance in the most demanding of environments.

Pioneering drop-down front door providing complete access to every internal surface for cleaning and maintenance – removing the need for assistance from estates. Manufactured from Magnelis Steel to combat rusting.

Floor Mounted

The patented quick access design of our floor-mounted AC covers enables a single person to access the interior unit for regular cleaning and maintenance.

A key benefit to the floor-mounted AC cover is that it allows for pre-fabricated cut-outs for vinyl flooring and skirting boards to ensure there is no need for noisy and messy on-site cutting.

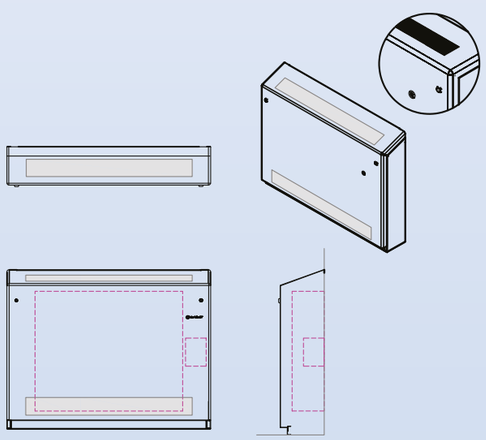

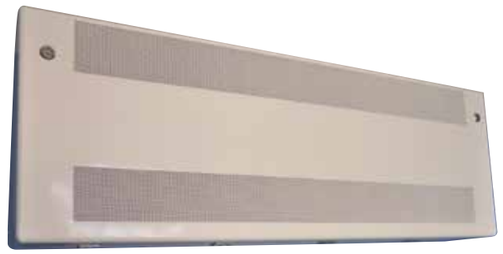

Wall/Ceiling Mounted

Air conditioning units in mental health, custodial and even SEN schools are more susceptible to tampering and vandalism. With this in mind, there is a need to provide a cover which is built around safety to the end-user.

A ceiling-mounted AC cover provides an ideal solution to provide protection from damage and vandalism because they can be fitted at height.

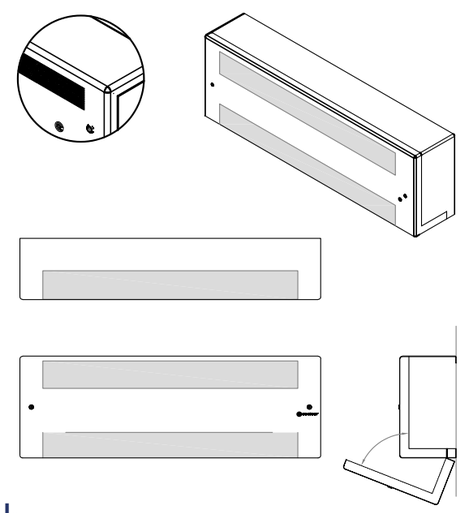

Flat Panel

We understand that every environment is different, and with this, will present its own unique requirements. That's why we have developed the flat-panelled AC covers.

Our AC covers can be retrofitted over existing systems to deliver a solution for use in hospitals, mental health units, SEN schools, pupil referral units care homes, nurseries, school, colleges and other public access buildings.

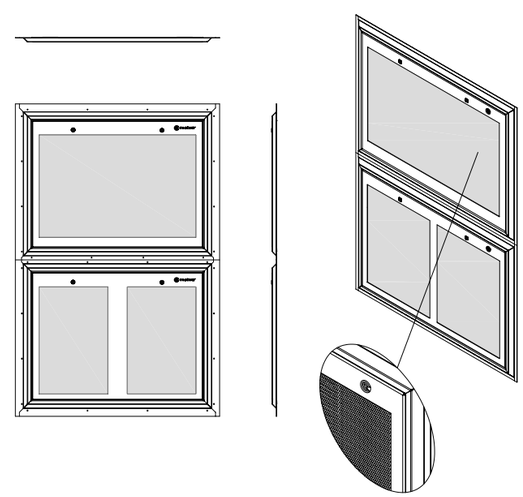

Perimeter

Perimeter casing requires careful designing to ensure that the efficient functioning of an air movement system will not be impeded by a casing form that suits the aesthetic of the interior environment.

With perimeter casing, you'll not need pipe boxing and it can provide easy access for cleaning and maintenance.

Pipe Boxing

Contour provides a range of metal and preformed plywood pipe boxing solutions. Robust and with a durable finish, our pipe boxing excels in high-traffic areas and the smooth finish enables easy cleaning.

We offer our pipe boxing in two profiles, L-shaped and U-shaped, both available in plywood and metal. In addition, Zintec and magnelis steel options are available and are suited to more demanding and high moisture environments.

We can provide an entirely bespoke and complete turnkey solution for metal and plywood pipe boxing, from survey and design through to manufacture and installation. Vented pipe boxing for one pipe systems can also be offered as an option.

Plywood Pipe Boxing

Contour's preformed plywood boxing is available in 5mm and 8mm thicknesses, providing a versatile and adaptable solution for concealing interior piping in applications ranging from bathrooms and bedrooms to complete heating installations.

Pre-finished with an attractive and durable, easy to clean white melamine surface as a standard, Contour's preformed plywood pipe boxing adheres to the latest NHS guidelines which call for all piping below 2m to be boxed in.

Where hygiene is a key consideration, plywood pipe boxing can be laminated to create a harder-wearing and less porous surface. Not only does this mean it can cope with more regular cleaning than the standard melamine finish option, it's also better suited for areas of high traffic.

Available in 2.5m and 3m lengths as standard, bespoke sizes are also available with a complete supply and install service.

There are also a variety of accessories available, including:

- Internal corners (90deg)
- External corners (90deg)
- Stop ends
- Butt joint covers
- Access doors
- Timber fixing battens metal angle brackets and fixing screws

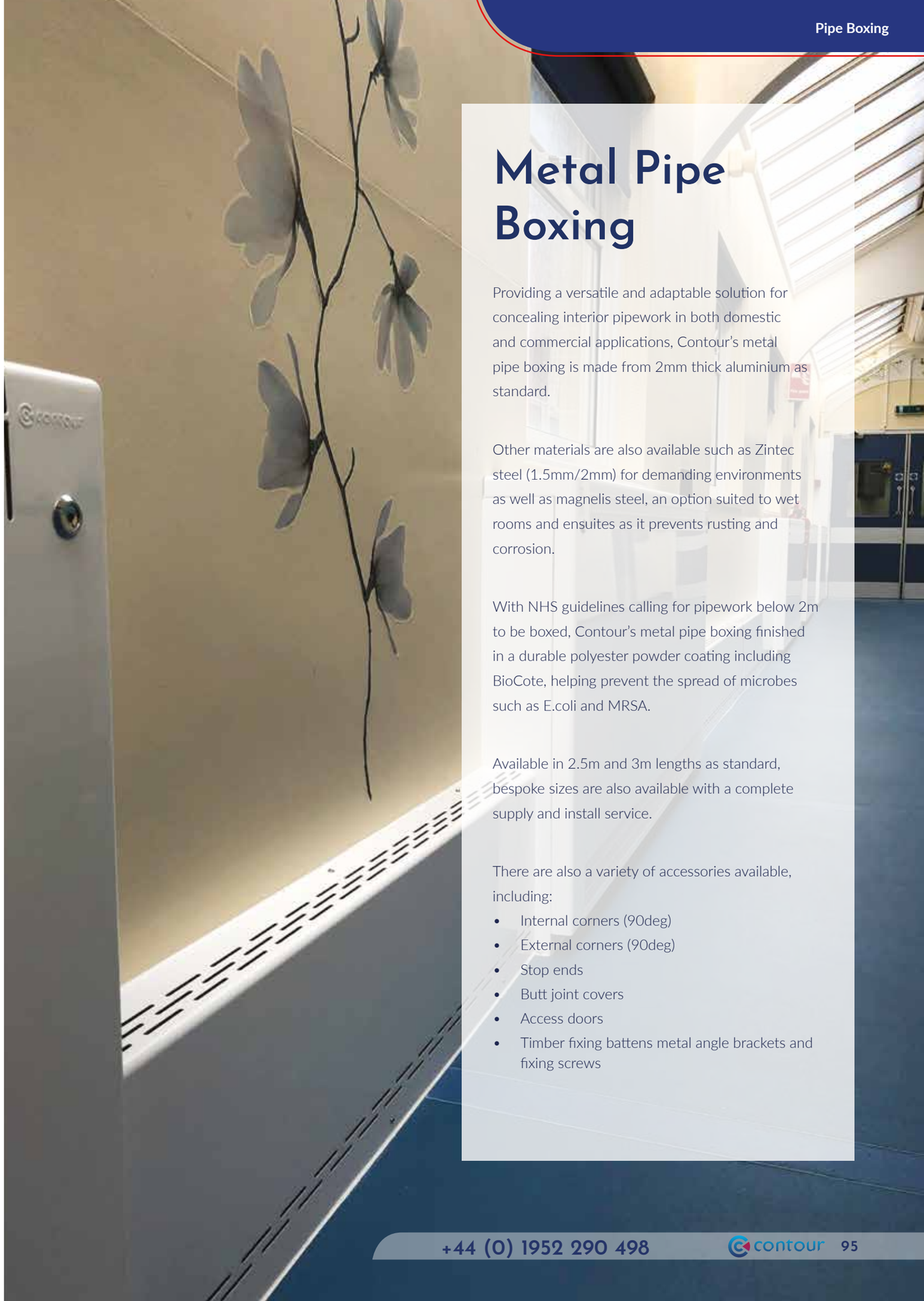

Metal Pipe Boxing

Providing a versatile and adaptable solution for concealing interior pipework in both domestic and commercial applications, Contour's metal pipe boxing is made from 2mm thick aluminium as standard.

Other materials are also available such as Zintec steel (1.5mm/2mm) for demanding environments as well as magnelis steel, an option suited to wet rooms and ensuites as it prevents rusting and corrosion.

With NHS guidelines calling for pipework below 2m to be boxed, Contour's metal pipe boxing finished in a durable polyester powder coating including BioCote, helping prevent the spread of microbes such as E.coli and MRSA.

Available in 2.5m and 3m lengths as standard, bespoke sizes are also available with a complete supply and install service.

There are also a variety of accessories available, including:

- Internal corners (90deg)
- External corners (90deg)
- Stop ends
- Butt joint covers
- Access doors
- Timber fixing battens metal angle brackets and fixing screws

Anti-Ligature Products

Alongside Contour's range of Anti-ligature radiators and guards, we have a comprehensive range of other anti-ligature solutions designed to be used in mental health and challenging environments.

Environments of this nature pose a series of suicide and self-harm risks, which has prompted us to develop our anti-ligature range.

Product Benefits:

- Strip hinged front door allows for authorised access only.
- 3mm holes are punched into powder coated ventilation grilles that allows the air to circulate through the cover whilst allowing the sound to transmit into the room.
- The frame of the cabinet is made from 25mm melamine faced MDF in a white finish. The TV is protected via a 8mm polycarbonate vision panel.
- Locked as standard with either key lock or starkey quarter turn locks.
- Standard sizes available to suit 32", 43" and 50" TVs. Should you require a different size then please contact us to discuss.

Anti-Ligature TV Cabinet

Designed to reduce ligature risk while providing secure television protection for all challenging behaviour environments

When an expensive item like a television gets damaged, it can be costly to replace.

TVs are installed into a number of environments such as Hospitals, Mental Health hospitals, SEN Schools and other public buildings. They are normally installed in bedrooms, lounges and waiting areas.

Depending on the environment, they are commonly targeted as an item of furniture to cause damage to. Contour's Anti-Ligature TV Cabinet protects TVs by fully encapsulating them in a stylish wooden cabinet. The sloping sides ensure there are no ligature points.

The TV cabinets are available in a range of wood-effect finishes.

Standard Sizes Available To Fit TVs Of:

32" 43" 50" 55"

Anti-Ligature Light Switch Covers

Light switches are often the target for vandalism in mental health settings. This can result in electrical shock risks and ligature risks.

The misuse of lights can also be an issue, especially emergency lighting being turned on as a night light. This then drains the batteries and cannot be used when needed in the event of an emergency.

For ultimate hygiene, the Anti-Ligature Light Switch incorporates BioCote®, the patented silver based anti-microbial agent in the paintwork. This unique, patented additive to our powder coating provides an effective, safe and long-lasting solution to combating a wide range of dangerous bacteria, including MRSA, providing a major benefit in areas where infection control is important.

This is especially important for light switches, as these gather bacteria quickly because they're used frequently. A safe, anti-microbial and easy to clean light switch cover is ideal for mental health environments, SEN schools, reception and waiting areas, wards, doctors, and accommodation areas as these environments benefit from a robust light switch cover.

The current design is to suit a MK light switch, double or four gang. The design can be adapted to suit other light switches upon request.

The Anti-Ligature Light Switch provides durability and authorised access only.

The benefits include:

- Manufactured from 1.5mm Zintec steel.
- Limits misuse by preventing service users from regularly turning lights on and off.
- Minimises the risk of self-harm through electrocution and obtaining shocks.
- Reduces energy usage.
- Robust frame with minimal ligature risks.
- Authorised access only with quarter turn security lock
- Powder coated finish - RAL 9003 white as standard (other colours are available upon request.)

Anti-Ligature Thermostat Cover

Anti-Ligature thermostat covers are ideal for environments that are required to ensure ligature risks are reduced to provide safety to users. They can be used in individual rooms within health settings so that all service users can be a comfortable temperature in their environment with control too.

Thermostats can be subject to vandalism in mental health settings, this can result in ligature risks because sharp parts could be on display and the internal capillary wire could be used to self-harm.

The robust chamfered box design reduces the ligature helps to reduce vandalism by deflecting impacts away from delicate body of the thermostat. IP3X ventilation grilles gives airflow to the thermostat whilst minimising the risk of ligature being able to be tied to the grille.

For ultimate hygiene, the anti-ligature thermostat cover incorporates BioCote®, the patented silver based anti-microbial agent in the paintwork. This unique, patented additive to our powder coating provides an effective, safe, and long-lasting solution to combating a wide range of dangerous bacteria, including MRSA, providing a major benefit in areas where infection control is important.

This is especially important for an anti-ligature thermostat, as thermostats can gather bacteria quickly because they are used frequently by staff and patients.

Currently designed for the Danfoss RA5060 head, the design could be adapted to suit other thermoststs.

The benefits include:

- Manufactured from 1.5mm Zintec steel.
- Limits vandalism and ligature risks
- Robust frame
- Powder coated finish - RAL 9003 white as standard (other colours are available upon request.)

Rotarad Valve kit

Gaining access behind radiators for cleaning and maintenance is fast-becoming a thing of the past with the advent of Rotarad rotating radiator valves.

Rotarad is a unique, WRAS, KTW and ACS approved rotating valve kit, which can be used on both new installation projects and retrofitted to existing radiators and eliminates many longstanding access problems.

By installing Rotarad, new or existing radiators can be rotated down to floor level for cleaning and maintenance, without having to drain or turn off the heating system, enabling fast and easy access to the rear of a radiator and the wall behind. Rotarad is fully compatible with Contour's DeepClean range.

The secret of Rotarad is the patented rotating valve fitting, which is used to adapt standard radiator valves and can be easily fitted to any standard panel radiator. This allows the radiator to pivot along the axis of the radiator valves, without putting any strain on the pipework or fittings. Radiators then become more practical, as they can be lowered quickly, simply and safely without the risk of causing a leak or worse. A robust bracket holds the emitter upright and against the wall.

Benefits

- Improve cleaning standards by allowing staff to get behind the radiator.
- Reduce infection rates on hospital wards
- Perfect for redecorating behind the radiator easily

*not suitable for heating systems that are piped up Top Bottom Opposite End or cast iron radiators

Anti-Ligature Ventilation Grille

Ventilation grilles are often positioned on ceilings or high on walls. Their openings can be used to create a ligature point, making ventilation grilles a serious hazard in mental health environments. Plastic grilles can be broken to create sharp instruments, creating a risk to service users and staff. Contour's Anti-Ligature ventilation grille reduces the ligature risk when installed over the top of standard ventilation grilles.

Benefits

- IP3x Grille (2mm holes at a 4mm staggered pitch) allow air to pass through.
- Robust, full frame provides easy access for cleaning and maintenance.
- Powder coated finish-white as standard (other colours available)
- Manufactured from 1.5mm Zintec Steel or 1.5mm Magnelis coated steel is also available when installing in wet areas.
- Security fixing is used to provide access to authorised staff.
- Exclusive BioCote® antimicrobial protection.
- Available with or without front access

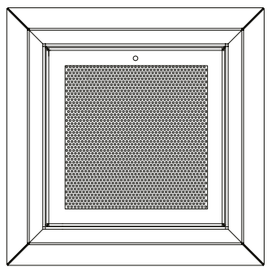

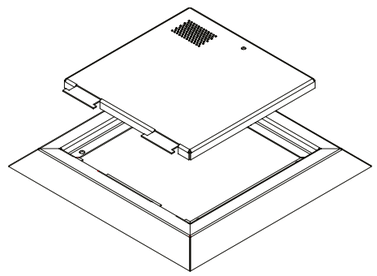

Sizes available:

Size	Product Code
200 x 200mm	ALG200200
250 x 250mm	ALG250250
300 x 300mm	ALG300300
350 x 350mm	ALG350350
400 x 400mm	ALG400400
450 x 450mm	ALG450450
500 x 500mm	ALG500500
550 x 550mm	ALG550550

*Bespoke sizes available

Further Reading

Guide To Anti-Ligature eBook

When planning the construction or refurbishment of a space within a mental health environment-or anywhere that occupies vulnerable individuals-it is essential that measures are put in place within the design process to reduce ligature risks.

This document is aimed to educate anyone involved in the design and specification of a setting that is occupied by vulnerable individuals at risk of suicide or self-harm.

Guide To Colour Psychology eBook

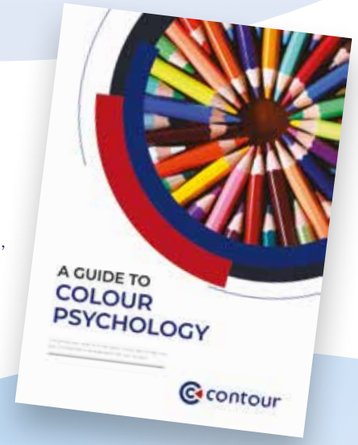

The choice of colour can greatly impact on an individual's mental state, with studies suggesting that certain colours can help aid the healing and rehabilitation process.

Coloured radiators can be used strategically within children's hospitals, autism wards, SEN schools and mental health environments to support the interior design of the space and make users more comfortable.

This document focuses on the following:

- The Science Of Colour Psychology
- The Psychology Behind Colour Preference
- Physical Reaction To Colour
- Colour Association

Keeping Heating Safe in Education eBook

Make your next education project the safest it can be!

If you're specifying for a school or nursery, selecting the right heating solution is essential. Not only are children vulnerable to high temperature surfaces, in some environment's radiators can quickly and easily become damaged.

In this eBook, we provide an extensive guide to safe heating, highlighting the risks faced in these educational environments, what needs to be considered and the cost-effective solutions that can instantly increase safety and hygiene.

Calculating Alternative Delta T Requirements

Method

a. Add the flow water temperature and the return water temperature together.

b. Divide the answer from a. by 2.

c. From the answer b. subtract the room temperature. This gives you your "Delta T" temperature.

d. Select the closest Delta T value to yours from the table, then multiply the corresponding factor by the output provided for the particular radiator to obtain the output for your calculated Delta T value.

Delta T	Factor
5°C	0.0501
10°C	0.1234
15°C	0.2091
20°C	0.3039
25°C	0.4061
30°C	0.5148
35°C	0.6290
40°C	0.7482
45°C	0.8720
50°C	1.0000
55°C	1.1319
60°C	1.2675
65°C	1.4065
70°C	1.5487
75°C	1.6940

Temperature	Working Out Delta "T"		
Flow Plus Return	**Div by 2**	**minus room temperature**	**Equals Factor T**
80 + 70 = 150	75	20 Degrees	T55
85 + 75 = 165	80	21 Degrees	T59
70 + 50 = 120	60	21 Degrees	T39

Contour Heating Products Ltd.

The Mansions
43 The Broadway
Shifnal
Shropshire
TF12 8BB

01952 290 498

sales@contourheating.co.uk

contourheating.co.uk

Providing safer and more hygienic heating solutions is Contour's aim.

From anti-ligature options that instantly protect the most vulnerable people in society, to low surface temperature products that are designed with ease of cleaning in mind, Contour has an extensive range for a variety of public and privately owned environments.

If you've got an old, outdated, or damaged heating system in place, and your concerned about the safety of those in the surrounding environment, speak to Contour today.

April 2022